DAFTAR ISI

FM WIRELESS MICROPHONE 88MHz-108MHz..... 1
TL-002 METAL DETECTOR (PENCARI LOGAM, KEDALAMAN MAX 7 cm, 9VDC).....2- 3
TL-105A 3 WAY ELECTRONIC SIGN FLASHER (110/220VAC, 1 NYALA 2 PADAM)..... 4
TL-108A1 SEQUENTIAL TIMER CONTROL (110/220VAC, UNTUK DISAMBUNG KE TL-108A3)..... 5
TL-108A3 3WAY SEQUENTIAL TIMER CONTROL (NYALA BERURUT, SAMPAI KE 3 OFF).....6- 7
TL-112 STROBO LIGHT (XENON FLASH TUBE 110/220VAC. MINI).....8- 9
TL-113 STROBO LIGHT (XENON FLASH TUBE 6/12VDC. MINI).....10-11
TL-125 ELECTRONIC SHOCK (1,5-3VDC)..... 12
TL-126 ALAT PIJAT ELECTRONIC (9VDC).....14-15
TL-151 LILIN ELECTRONIC (110/220VAC)..... 13
TL-152 LILIN ELECTRONIC (1,5-3VDC).....16-17
TL-207B ELECTRONIC BIRD SOUND (KONTES SUARA BURUNG, 6VDC).....18-19
TL-306 STEREO LED VU DISPLAY (12VDC, PAKAI LED DISPLAY).....20-21
TL-308 STEREO LED VU DISPLAY (12VDC, PAKAI LED BIASA).....22-23
TL-404A MUSICAL BELL (1,5-3VDC, 1 LAGU)..... 54
TL-452 MINI ORGAN.....24-25
TL-503A DC FLUORESCENT LAMP CONVERTER 10 WATT - 32 WATT (NEON ACCU 24VDC).....26-27
TL-512 AUTOMATIC BATTERY CHARGER 6V-12V (UNTUK BATERE KERING 1-10A).....28-29
TL-611 20 LED ELECTRONIC SIGN FLASHER (12VDC. LED NYALA 1 MELINGKAR).....30-31
TL-611A 38 LED ELECTRONIC SIGN FLASHER (ELECTRONIC ROULETTE, 6-12VDC).....32-33
TL-612 30 LED ELECTRONIC SIGN FLASHER (12VDC, LED NYALA 1 MELINGKAR).....34-35
TL-614 RUNNING LED (5 LED 2 WARNA).....36-37
TL-615 RUNNING LED (6 LED BOLAK-BALIK).....38-39
TL-615A RUNNING LED (11 LED BOLAK-BALIK).....40-41
TL-616 RUNNING LED (10 LED).....42-43
TL-622 36 LED SIGN FLASHER (6VDC, 12 NYALA 24 PADAM, BERKELILING).....44-45
TL-623 36 LED SIGN FLASHER (12VDC, 12 NYALA 24 PADAM, BERKELILING).....46-47
TL-624 36 LED SIGN FLASHER (6VDC, 24 NYALA 12 PADAM, BERKELILING).....48-49
TL-625 36 LED SIGN FLASHER (12VDC, 24 NYALA 12 PADAM, BERKELILING).....50-51
TL-666B CEPAT-TEPAT (110/220VAC, 3 X RELAY).....52-53
TL-1030 LAMP DIMMER CONTROL (PEREDUP LAMPU, 110V-220VAC)..... 55
TL-1031 AUTOMATIC LAMP DIMMER CONTROL(110-220VAC, REDUP TERANG OTOMATIS).....56-57
TL-1032 2 WAY AUTOMATIC LAMP DIMMER CONTROL (REDUP TERANG OTOMATIS 2 JALUR)...58-59
TL-1033 3 WAY AUTOMATIC LAMP DIMMER CONTROL (REDUP TERANG OTOMATIS 3 JALUR)...60-61
TL-1107 ELECTRONIC DIGITAL CLOCK (12VDC, JAM MOBIL).....62-63
TL-1112 ELECTRONIC DIGITAL CLOCK (12VDC, DISPLAY 16 X 5 cm).....64-66
TL-1122 ELECTRONIC DIGITAL CLOCK (12VDC, DISPLAY 21,8 X 6,8 cm).....67-69
TL-1200 ECHO MIC (ECHO RUANG, IC MN 3007).....70-72
TL-1220/1220A ECHO REVERBERATION (ECHO REPEATER, IC MN 3008/3005).....73-75
PIEZO ALARM (ELECTRONIC BUZZER)..... 76

FM WIRELESS MICROPHONE

(3 TRANSISTOR)

R1..... 5,6K
R2..... 470K
R3..... 10K
R4..... 33K
R5..... 150
R6..... 47K
R7..... 180

C1.2..... 100KpF
C3..... 1 KpF
C4.5.8..... 10 pF
C6.7..... 2,2KpF

TR1..... CS9014
TR2.3..... C 838
Condenser Mic

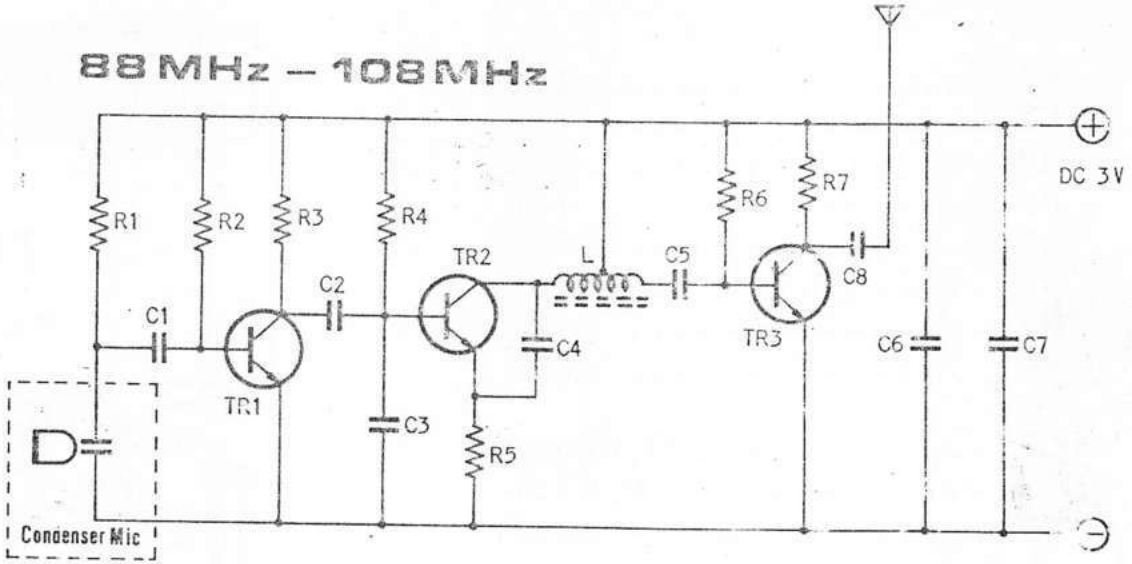

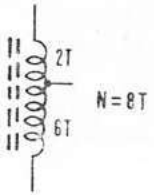

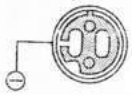

Condenser Mic

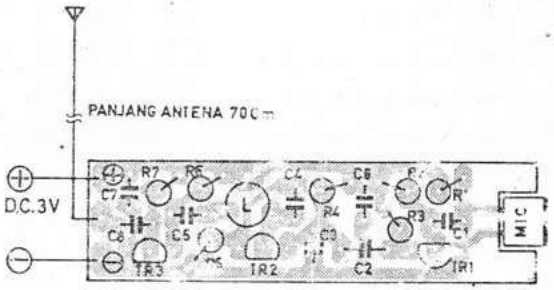

TL-002

PARTS LIST

R1	1 K
R2	680
R3	68K
R4	10K
R5	390K
R6	330
R7	2,2K
VR	2 K
C1	0,022uF
C2	0,01uF
C3	10uF
TR1.2.3	CS 9014
TR4	CS 9013
D1	ZD 6V2
D2	1N4148
D3	LED

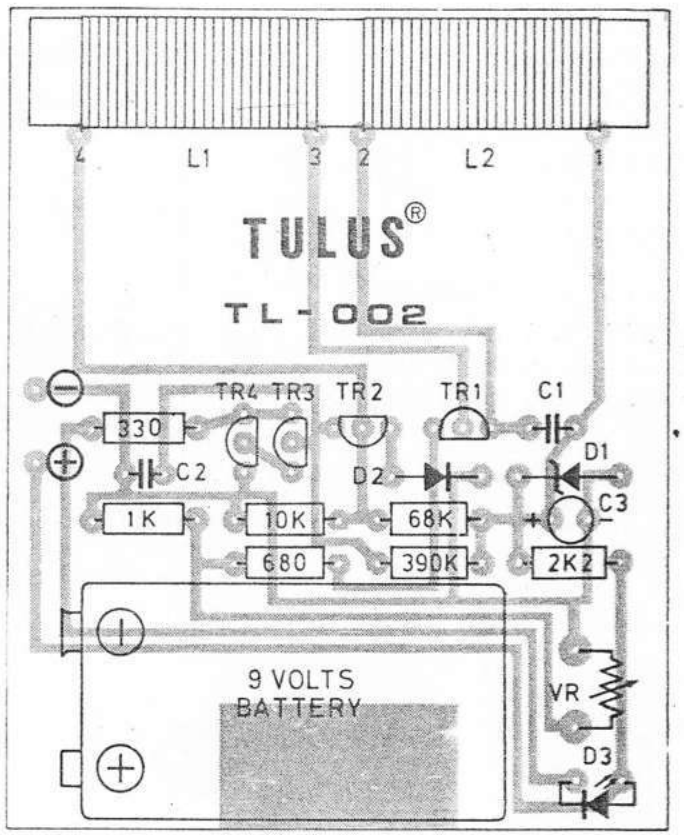

METAL DETECTOR

(PENCARI LOGAM, KEDALAMAN MAX 7 cm, 9VDC)

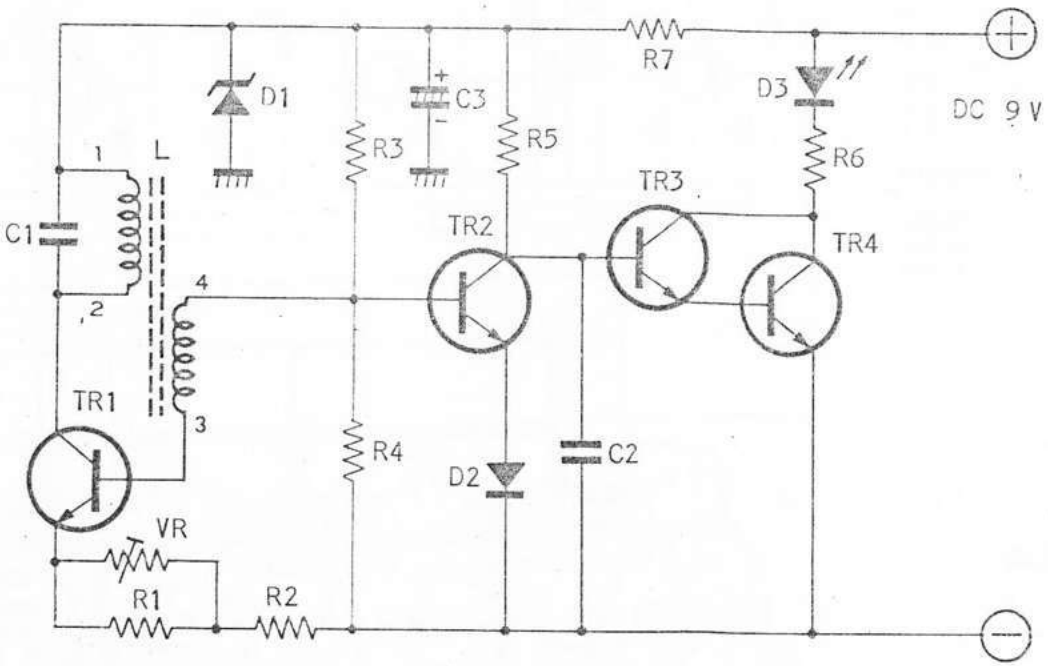

TL - 002

CIRCUIT DIAGRAM

TULUS® KIT

3 WAY ELECTRONIC SIGN FLASHER

(LAMPU NYALA BERPUTAR 1NYALA 2PADAM)

R1.2.3.8.9.10.15.16.17....	100K
R4.7.11.14.18.21.....	12K
R5.12.19.....	2,2K
R6.13.20.....	1 K
R22.....	220
VR1.2.3.....	3 K
VR4.....	5 K
C1.2.3.....	47uF25V
D1 - 9.....	1N4002
TR1.2.3.....	CS9013
SCR1.2.3.....	T-103

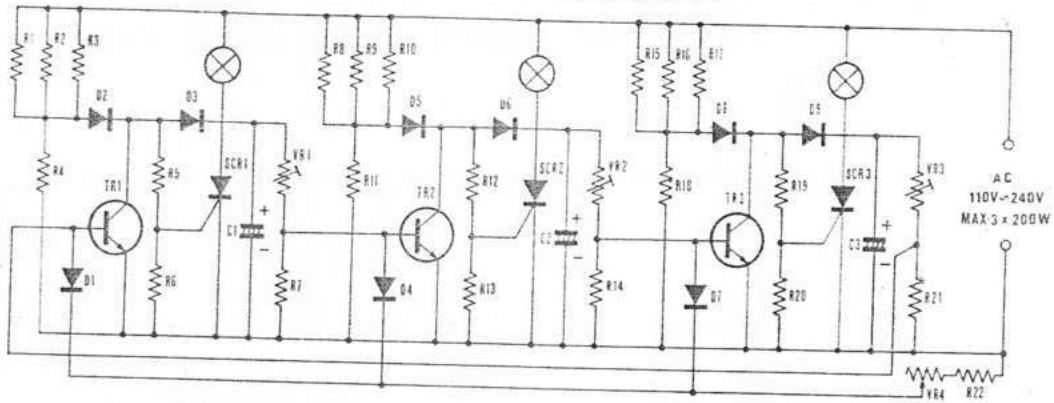

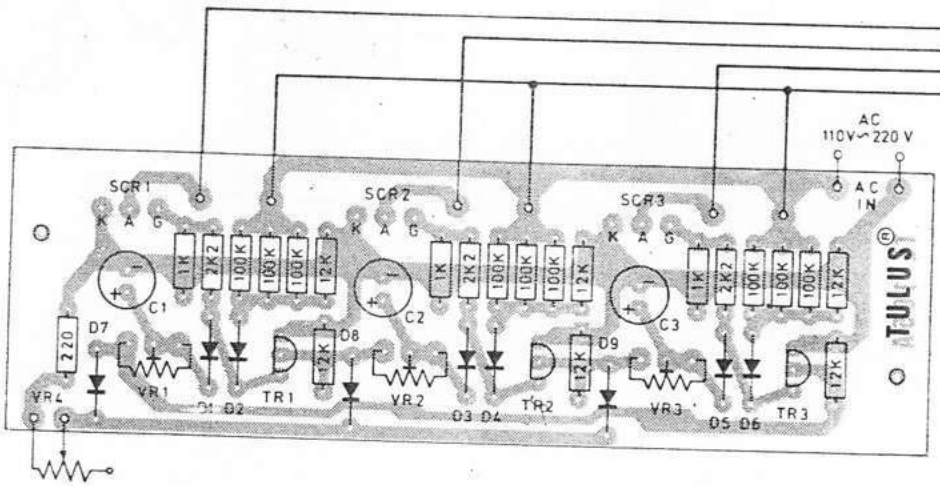

TL-105A

SEQUENTIAL TIMER CONTROL

R1.2.3.7.8.9.....	100K
R4.....	4,7K
R5.....	10
R6.....	12K
R10.....	1 K
VR.....	5 K
C.....	100uF25V
D1.2.....	1N4002
SCR.....	T-103
TR.....	CS9013

KETERANGAN :
TL-108A1 untuk digabungkan ke TL-108A3

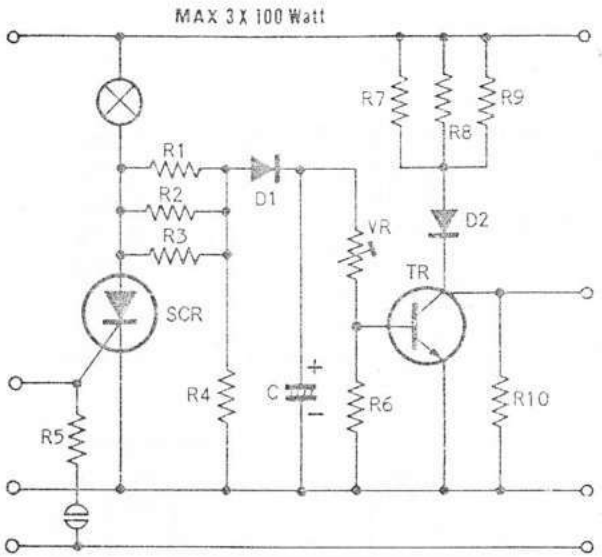

TL-108A1

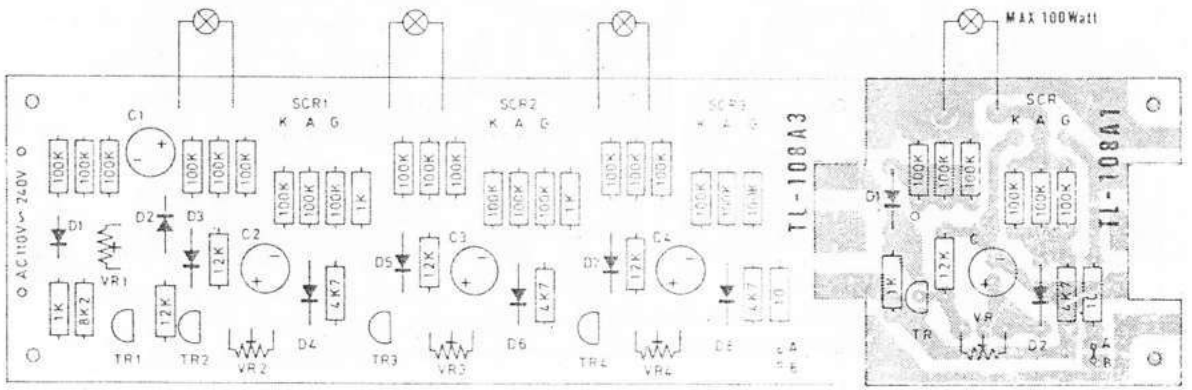

TL-108A3

PARTS LIST

R1.2.3.7.8.9.11.12.13....	100K
R16.17.18.20.21.22.....	100K
R25.26.27.29.30.31.....	100K
R4.14.23.....	4,7K
R5.....	10
R6.15.24.28.....	12K
R10.19.32.....	1 K
R33.....	8,2K

VR1.2.3.4.....	5 K
C1.....	220uF25V
C2.3.4.....	100uF25V
D1-8.....	1N4002
TR1.2.3.4.....	CS9013
SCR1.2.3.....	T-103

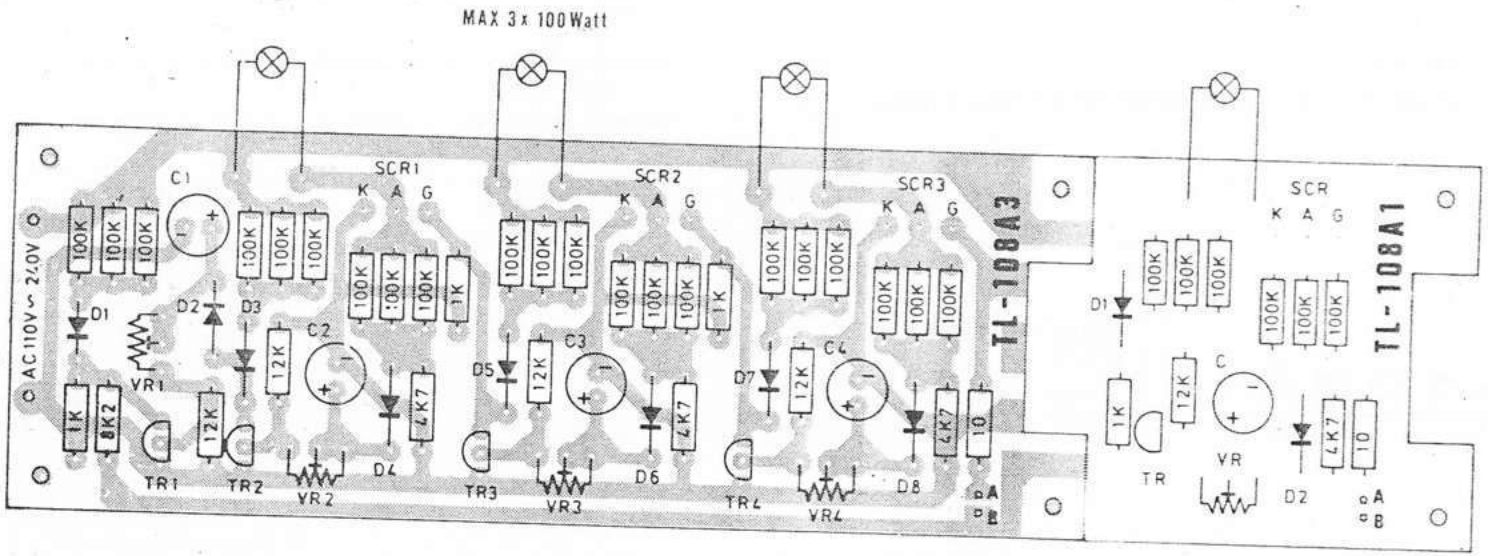

SEQUENTIAL TIMER CONTROL

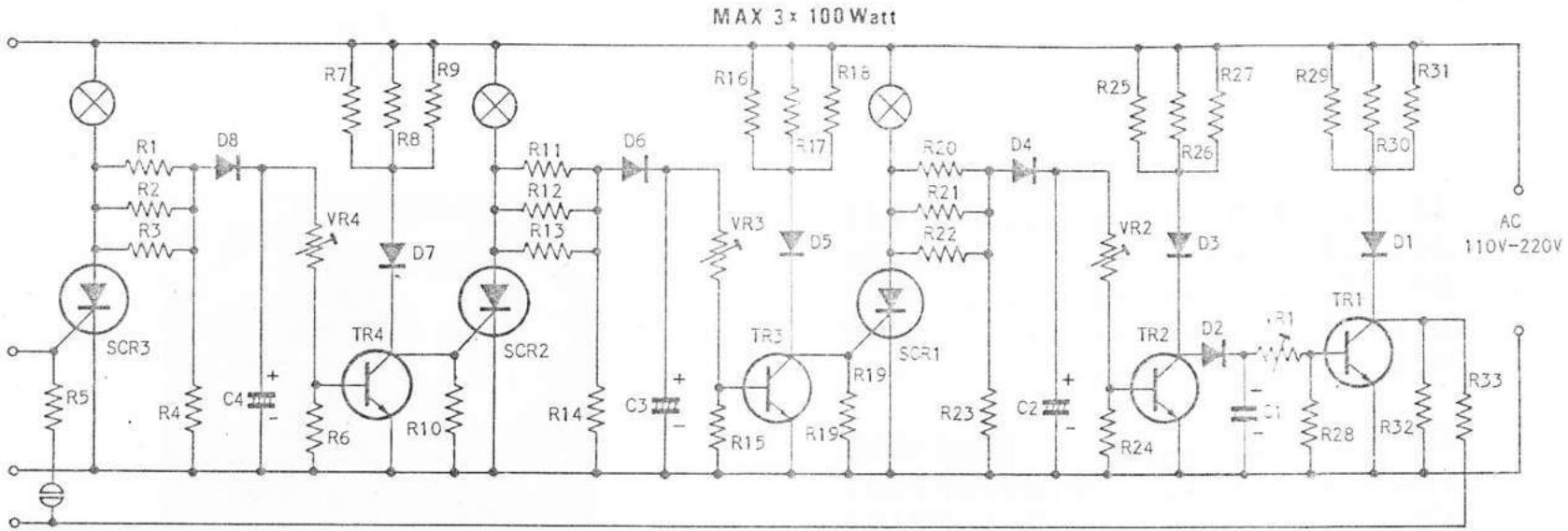

KETERANGAN :

- TL-108A3 dengan nyala 3 lampu secara berurut sampai semua nyala, lalu padam, begitu seterusnya.
- Untuk penggunaan hanya 3 lampu, titik A dan B pada P.C.B. dihubungkan.
- Untuk penggunaan lebih dari 3 lampu, titik A dan B pada P.C.B. TL-108A3 diputuskan, tambahkan TL-108A1 (1 kit untuk 1 lampu) sebanyak yang diinginkan, lalu hubungkan titik A dan B pada P.C.B. TL-108A1 yang terakhir.

TL-108A3

CIRCUIT DIAGRAM

TL-112

PARTS LIST

R1.2.3.4.5.....	18K
R6.7.8.....	5,6K
R9.13.....	220K
R10.11.....	470K
R12.....	1 K
C1.2.....	10uF450V
C3.....	0,047uF250V
C4.....	0,1uF250V
D1.2.3.....	1N 4007
Ne.....	Neon lamp
T.....	Trigger coil
FT.....	Xenon flash tube
SCR.....	FOR2B

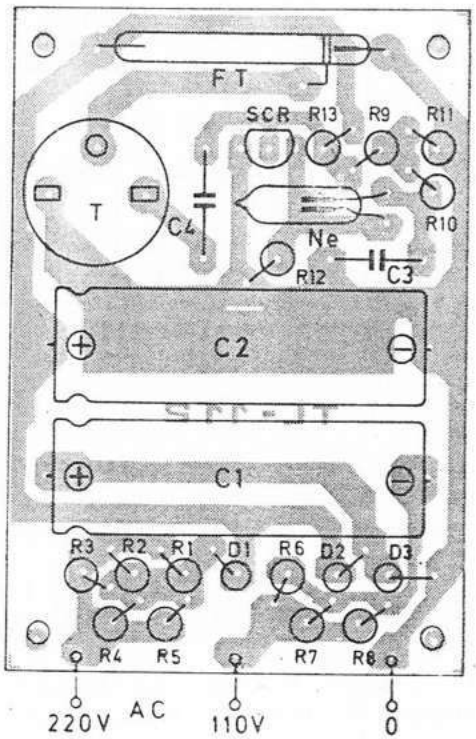

ELECTRONIC STROBO LIGHT
(MINI)

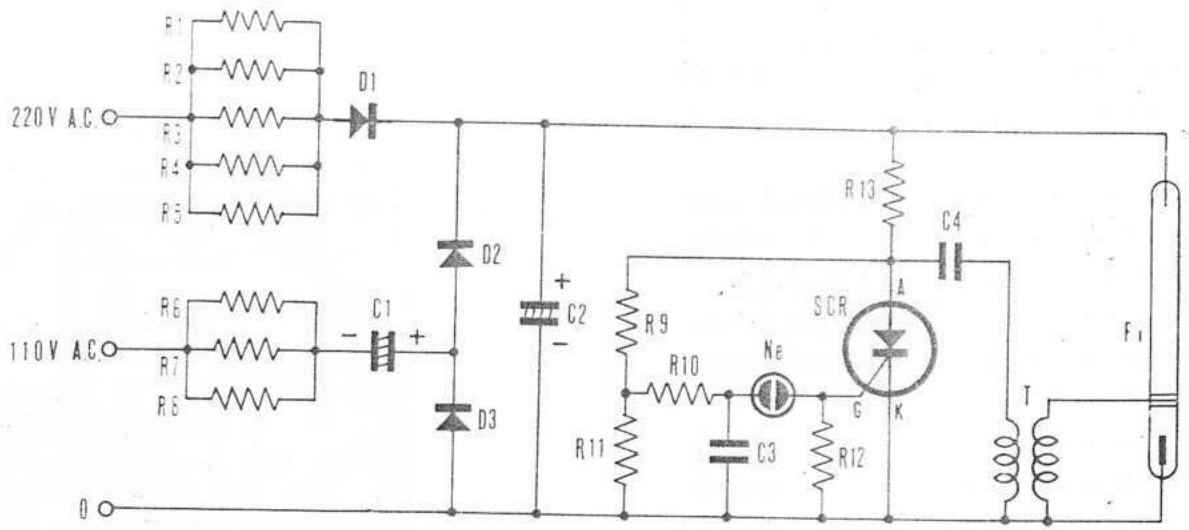

TL-112

CIRCUIT DIAGRAM

TL-113

PARTS LIST

R1.2.3.4	33
R5	47K
R6	2,2K
R7.11	220K
R8.9	470K
R10	1 K
C1	0,22uF16V
C2	0,1uF50V
C3	10uF450V
C4	0,047uF250V
C5	0,1uF250V
D1	1N 4002
D2	1N 4007
Ne	Neon lamp
T1	Transformer 1:50
T2	Trigger coil
FT	Xenon flash tube
SCR	FOR2B
TR1	CS9014
TR2	2N4355

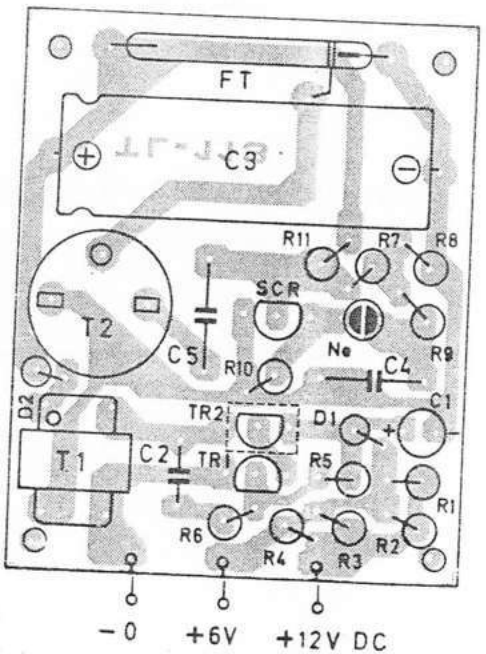

DC ELECTRONIC STROBO LIGHT
(MINI)

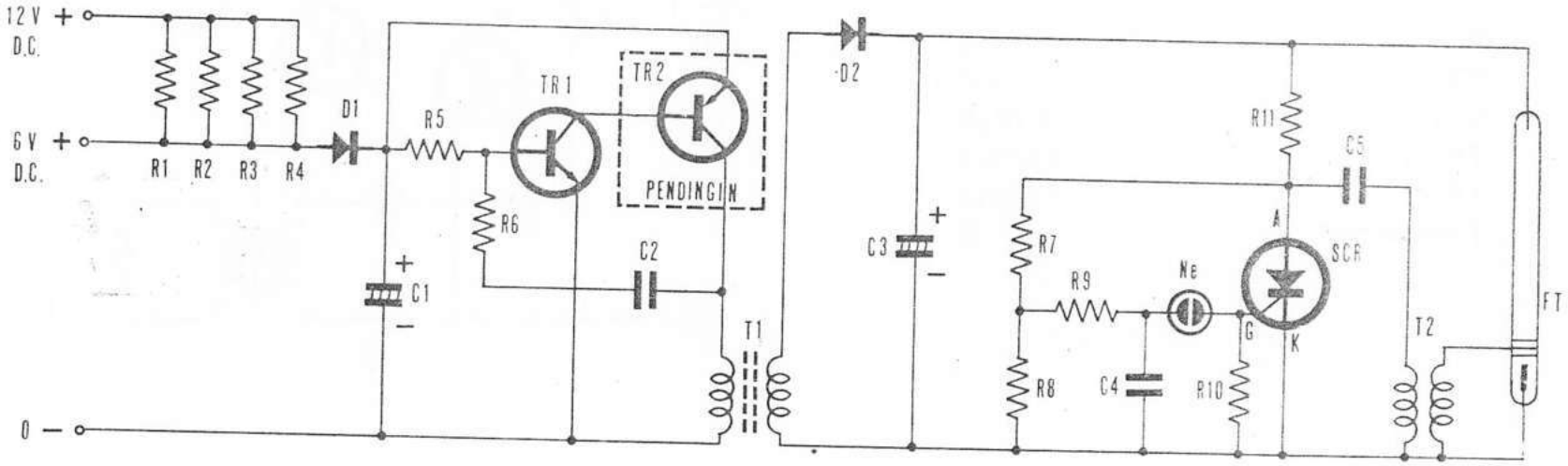

TL-113

CIRCUIT DIAGRAM

ELECTRONIC SHOCK

R1	33K
R2	330
C	4,7KpF
TR1	CS9014
TR 2	CS9012
Transformer	1 : 50

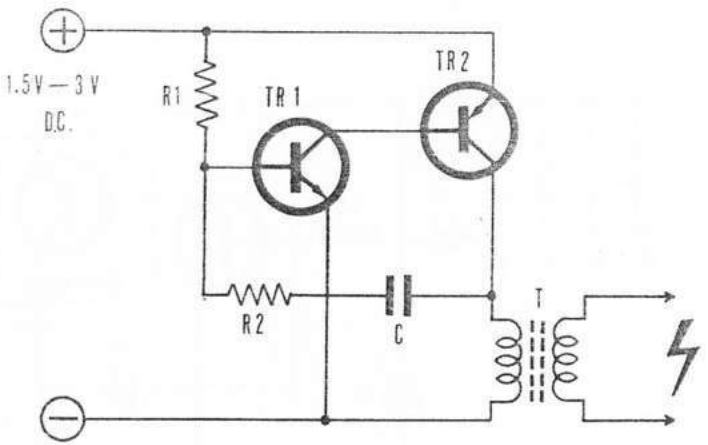

TL-125

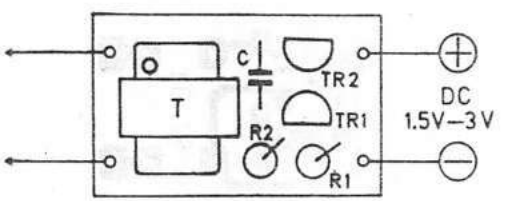

LILIN ELECTRONIC
(AC 110V ~ 220V)

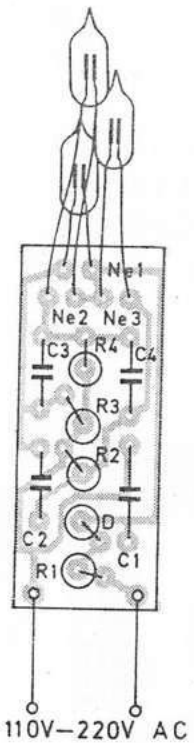

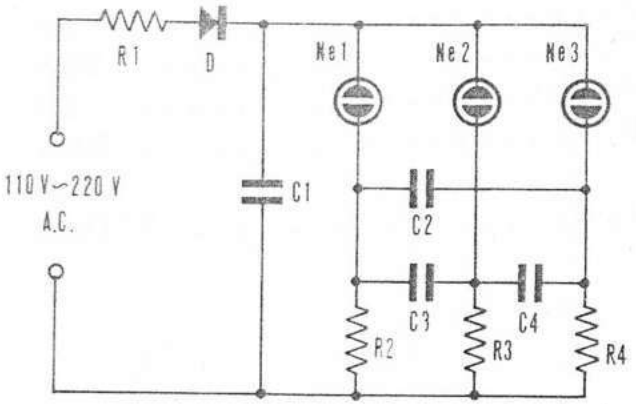

R1	100K
R2. 3. 4	1 M
C1	47KpF 400V
C2. 3. 4	100KpF50V
D	1N4007
Ne 1. 2. 3	Neonlamp

TL-151

TL-126

PARTS LIST

R1..... 33
R2.3.....100K
R4..... 10
VR..... 50K

C1.3..... 220uF

C2..... 1 uF
C4..... 0,1uF

Ne.....NEONLAMP
D..... 1N4007
TR..... CS9013
T..... Transformer 1:10

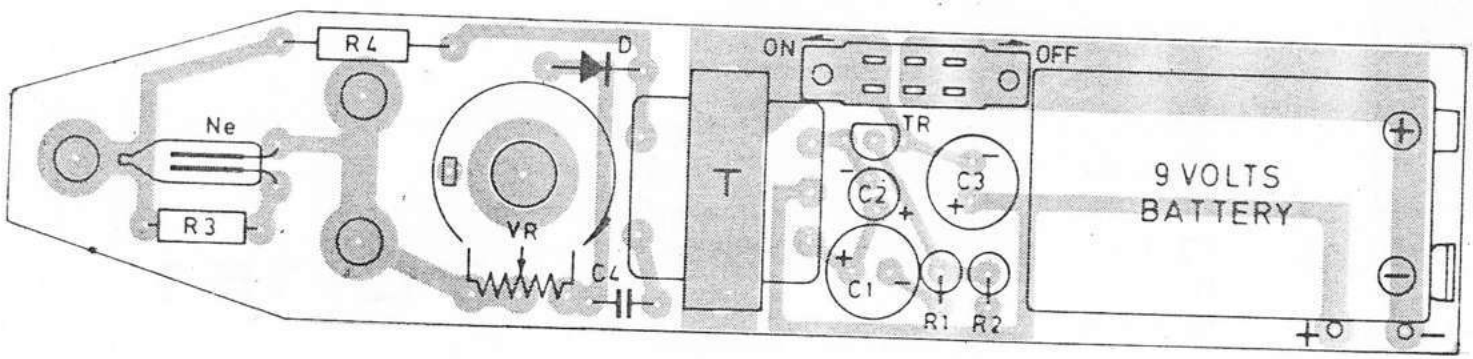

ALAT PIJAT ELECTRONIC

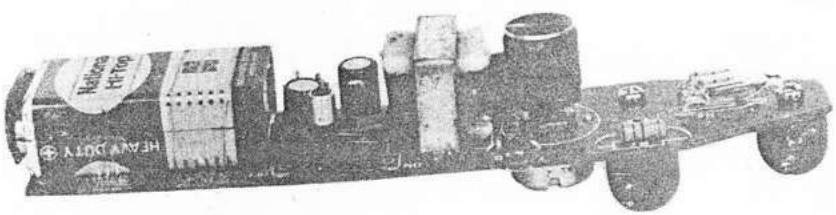

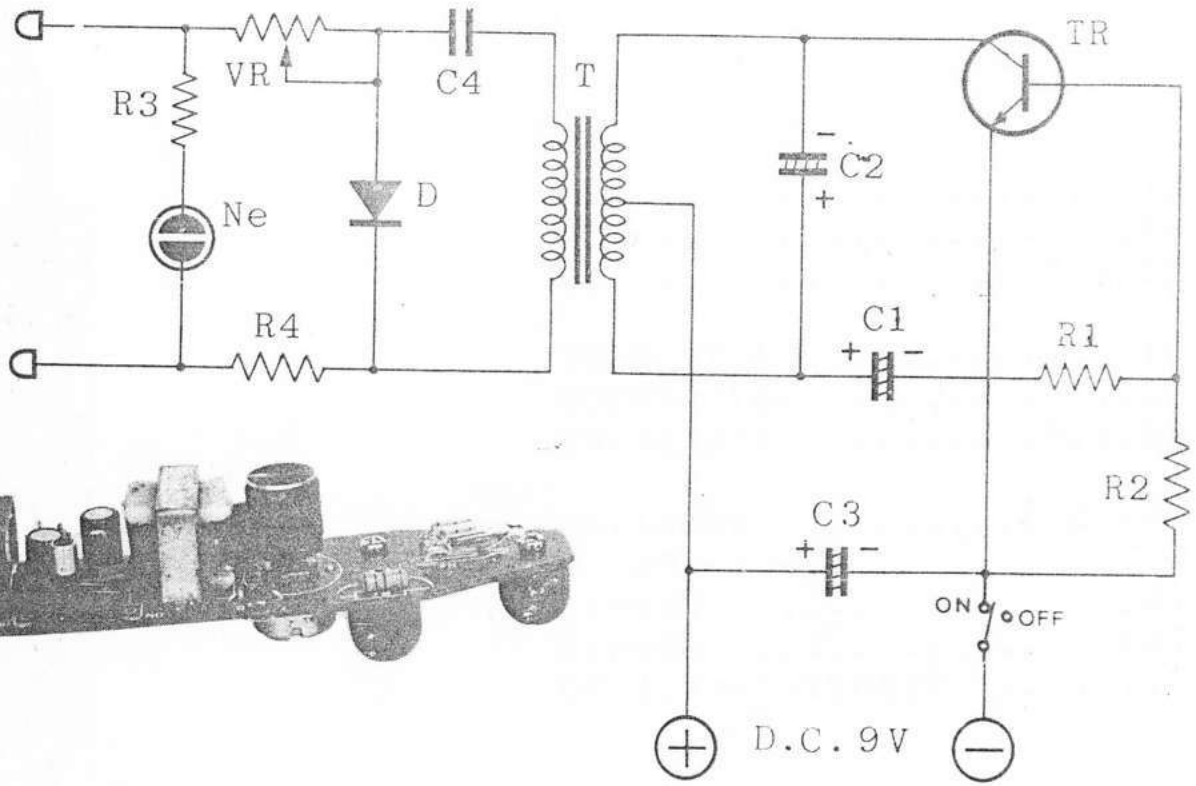

TL-126

CIRCUIT DIAGRAM

TL-152

PARTS LIST

R1..... 47K
R2..... 330
R3.4.5..... 1M

C1..... 4,7KpF50V
C2..... 47KpF250V
C3.4.5..... 100KpF50V

Ne1.2.3..... Neonlamp
D..... 1N4007
TR1..... CS9014
TR2..... CS9012
T..... Transformer 1:50

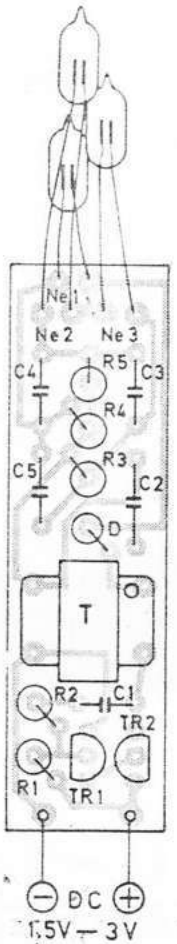

LILIN ELECTRONIC
(DC 1.5V — 3V)

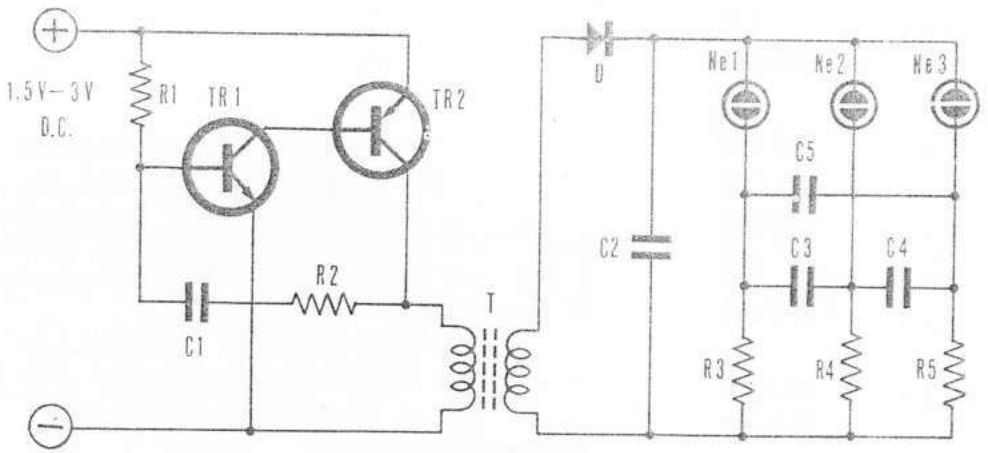

TL-152

CIRCUIT DIAGRAM

TL-207B

PARTS LIST

R1.5.7.8.....	47K
R2.6.....	68K
R3.....	100K
R4.....	180K
R9.11.....	39K
R10.12.....	1K
R13.14.....	680K
R15.16.....	1M
R17.18.....	330K
R19.20.....	10K
R21.....	1K8
R22.....	22
VR1.2.....	100K
C1.....	10uF
C2.....	22uF
C3.4.7.....	220uF
C5.6.....	2,2KpF
D1.2.3.4.5.6.....	1N4148
TR.....	CS9013
IC.....	TMX840
Speaker.....	8 ohm

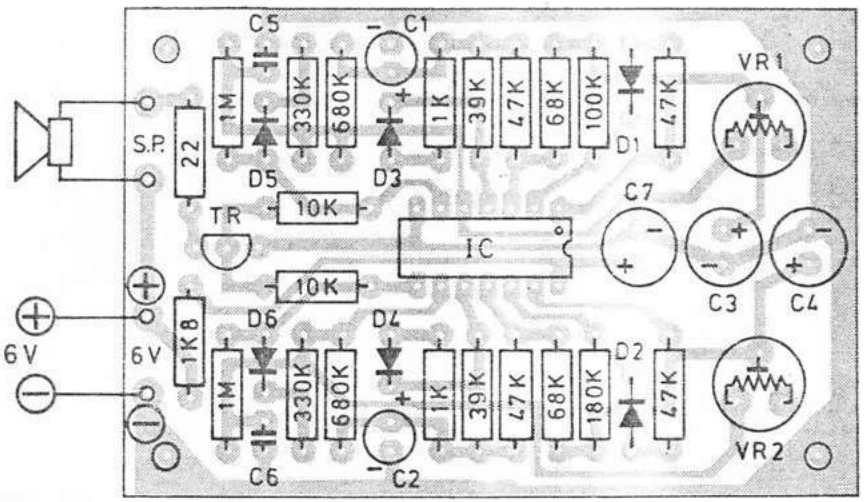

ELECTRONIC BIRD SOUND

(KONTES SUARA BURUNG)

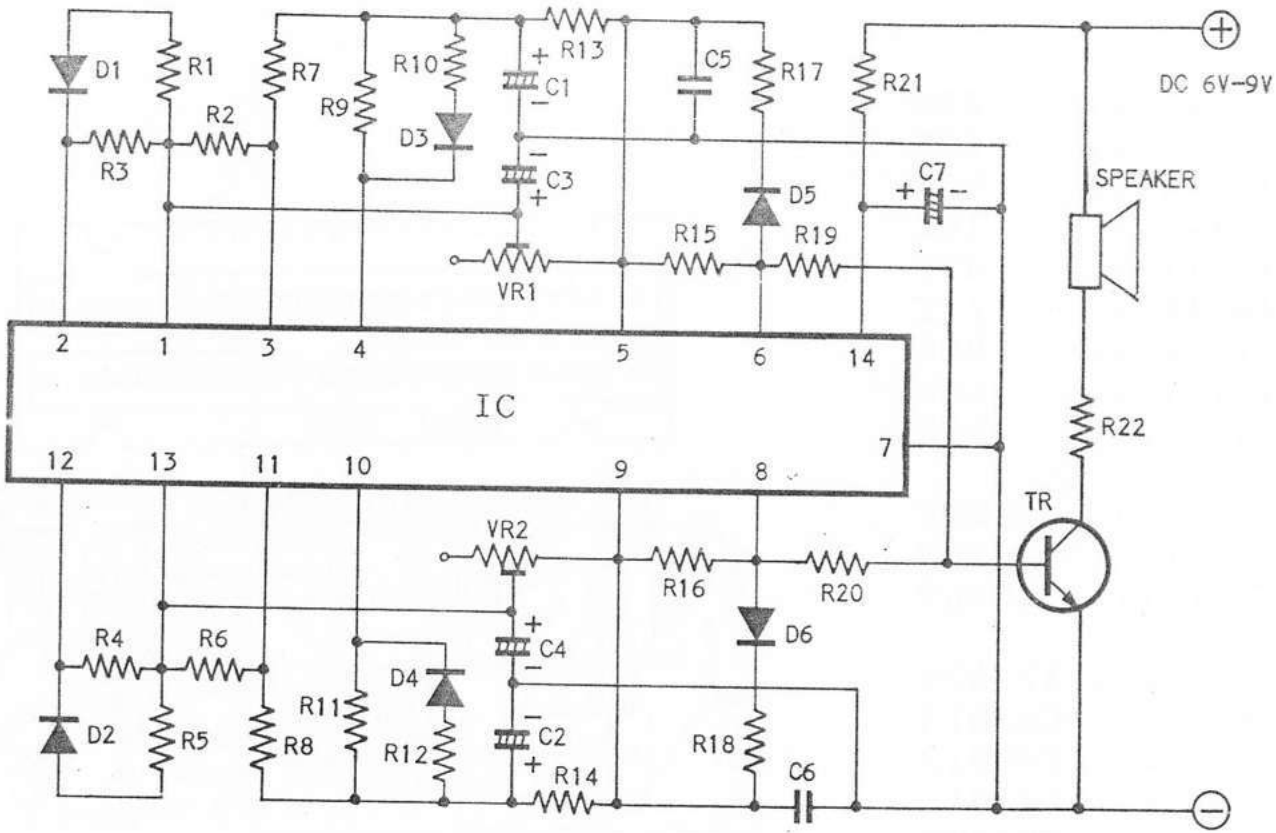

TL-207B

CIRCUIT DIAGRAM

TL-306

PARTS LIST

R1.2.....	220
R3.4.....	12K
R5.6.....	15K
R7.8.....	18K
R9.....	470
R10.13.15.16...	1 K
R11.12.....	22K
R14.17.....	10K
VR.....	50K
C1.2.....	2.2uF
C3.4.....	0.47uF
C5.....	100uF
D1.2.....	1N4002
TR1.2.3.4.....	CS9013
TR5.6.....	CS9012
IC.....	LM3915
DISPLAY.....	TS4378

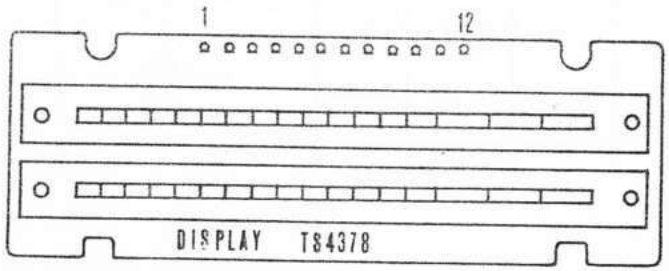

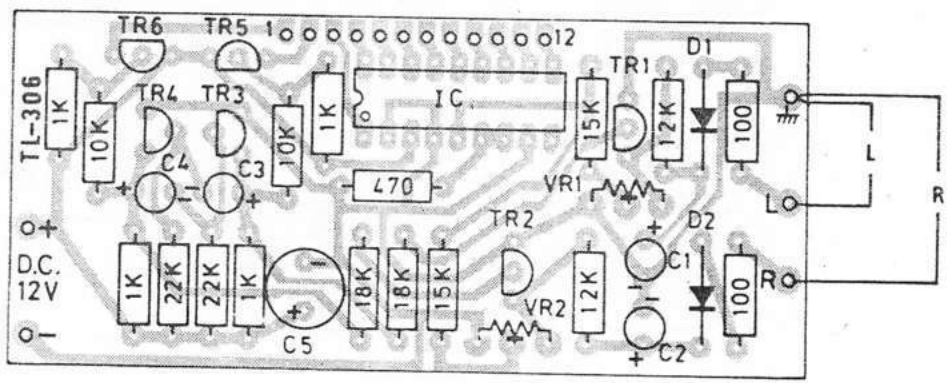

STEREO LED VU DISPLAY

(DARI OUTPUT AMPLIFIER)

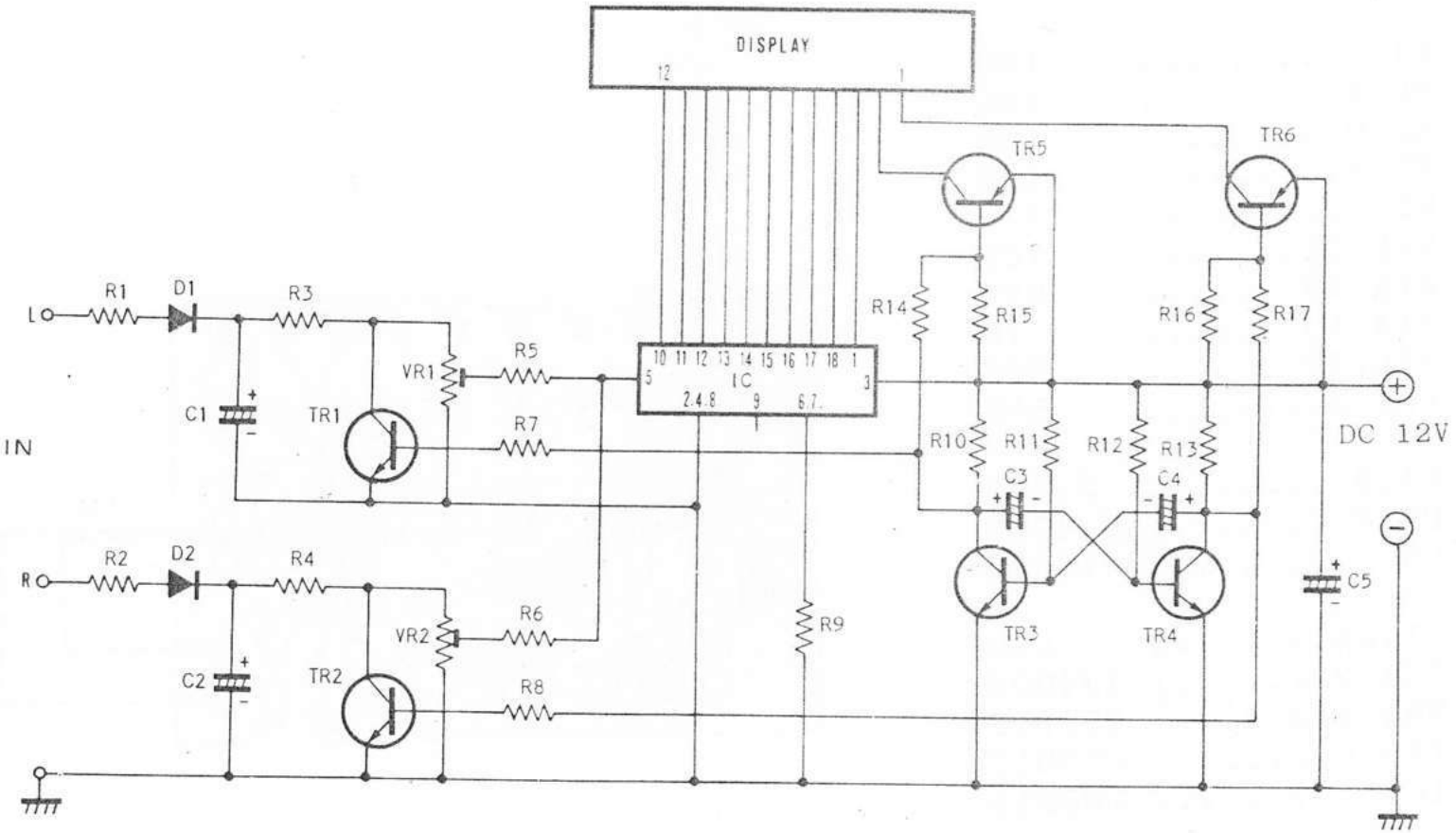

TL-306

CIRCUIT DIAGRAM

TL-308

PARTS LIST

R1.3.....	100
R2.4.....	12K
R5.6.....	15K
R7.8.....	18K
R9.....	470
R10.11.....	10K
R12.13.....	820
R14.15.....	1K
R16.17.....	22K
VR1.2.....	50K
C1.2.....	2.2uF
C3.4.....	0.47uF
C5.....	100uF
D1.20.....	LED
D21.22.....	1N4002
TR1.2.3.4....	CS9013
TR5.6.....	CS9012
IC.....	LM3915

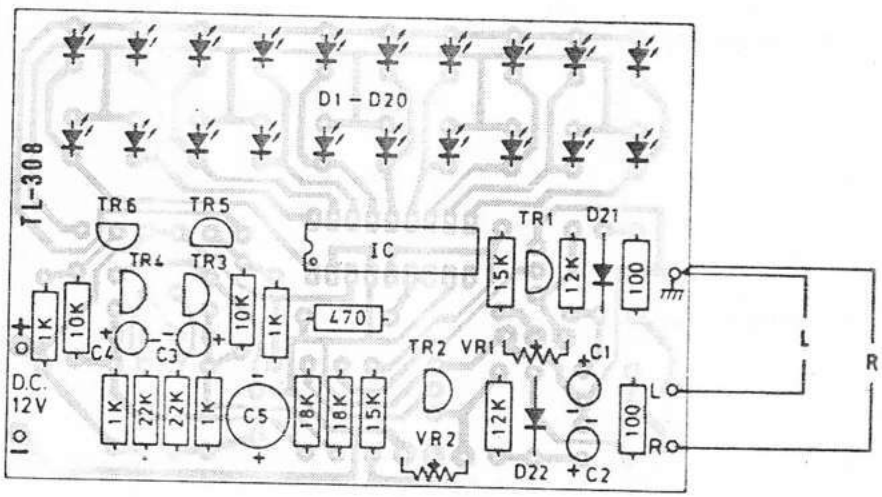

STEREO LED VU DISPLAY

(DARI OUTPUT AMPLIFIER)

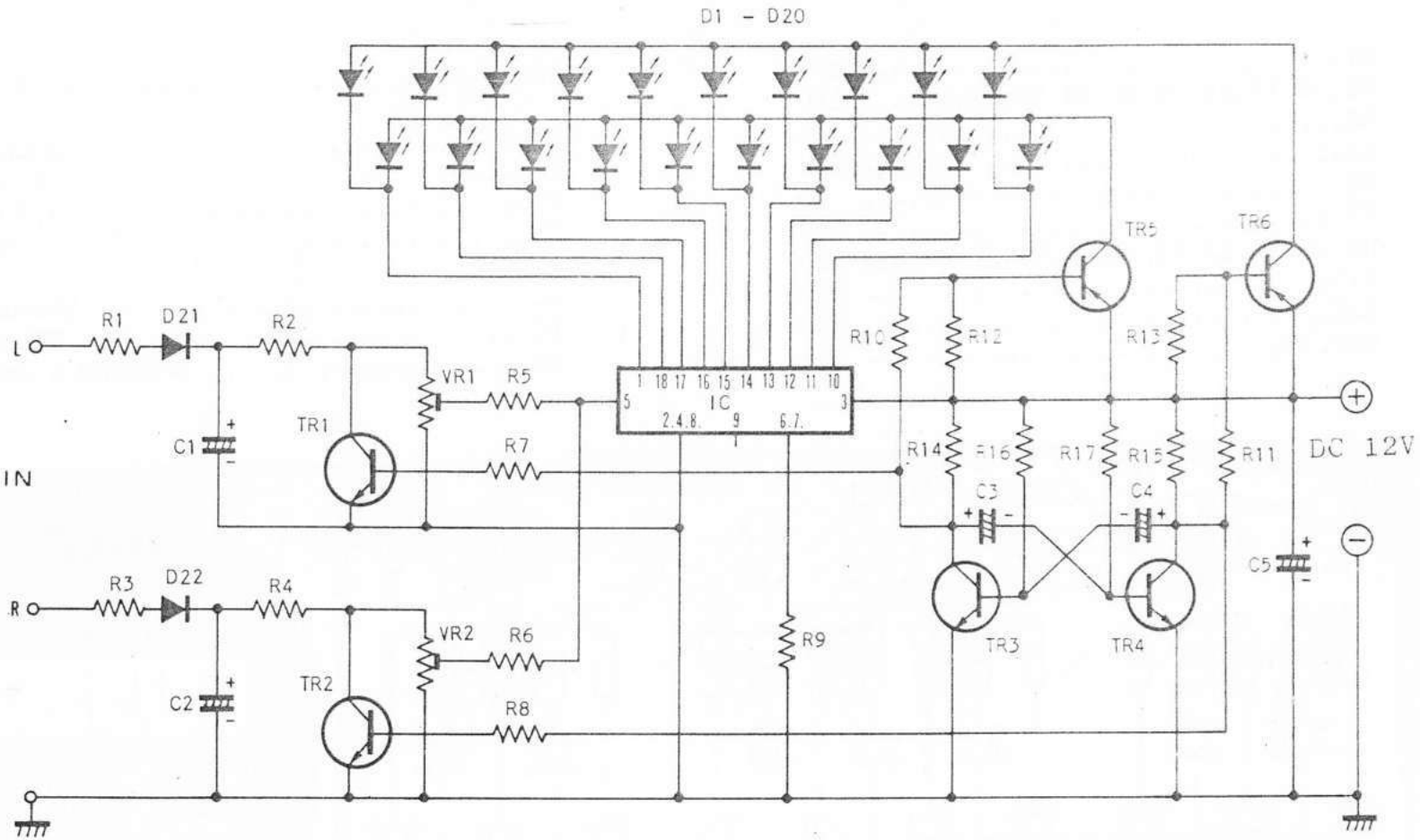

TL-308

CIRCUIT DIAGRAM

TL-452

PARTS LIST

R1	47K
R2.16.17.18.19.20.21.23.24	180
R3	10K
R4.5	22K
R6	10
R7.8	560
R9.10.11.12.13.14.25.26.27.28.31	120
R15	100
R22	220
R29.30	150

VR	2 K
C1.4	220uF
C2	1 uF
C3	4,7uF
C5	10uF
D	1N4002
IC	NE556
SP	SPEAKER 8 ohm

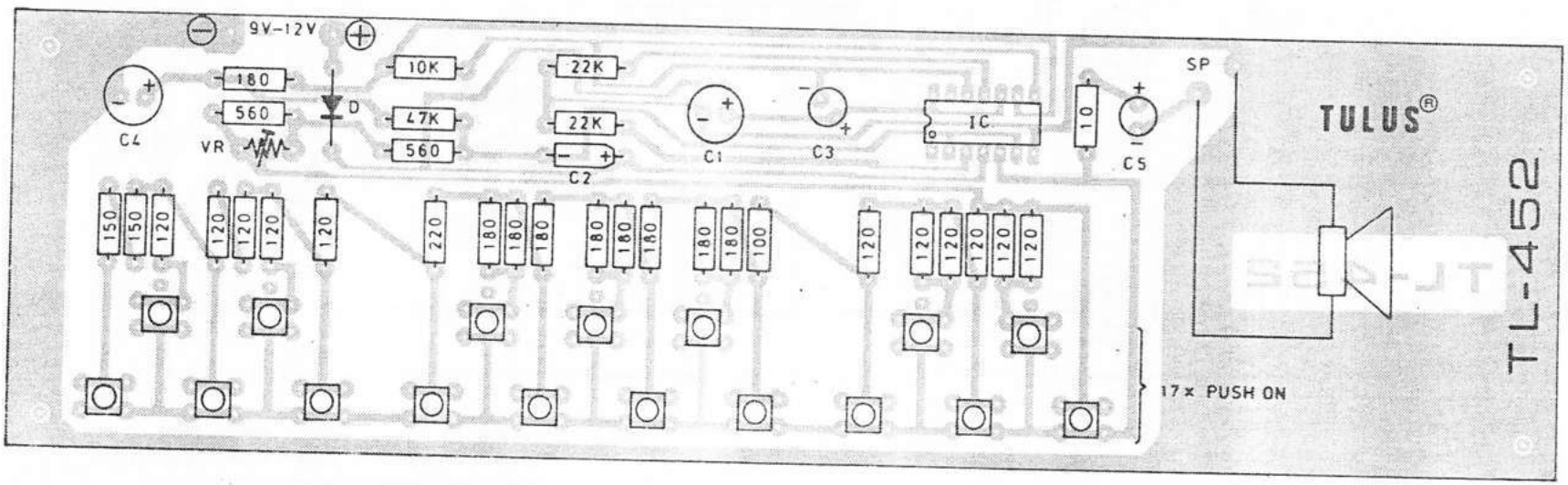

MINI ORGAN

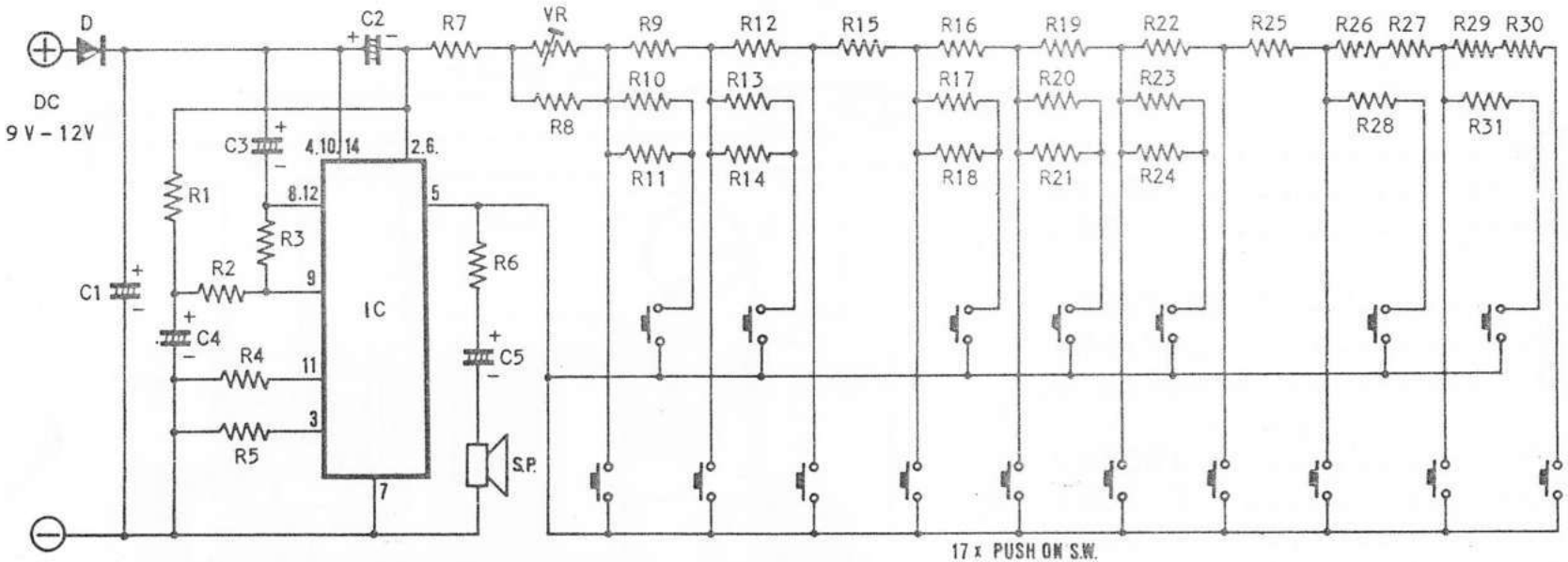

TL-452

CIRCUIT DIAGRAM

TL-503A

PARTS LIST

R1.....	1,2K
R2.....	47/2W
R3.....	330
C1.....	0,22uF/50V
C2.....	0,1uF/50V
C3.....	470uF/25V
D.....	1N5402
TR.....	C 1061
Transformer....	T-20

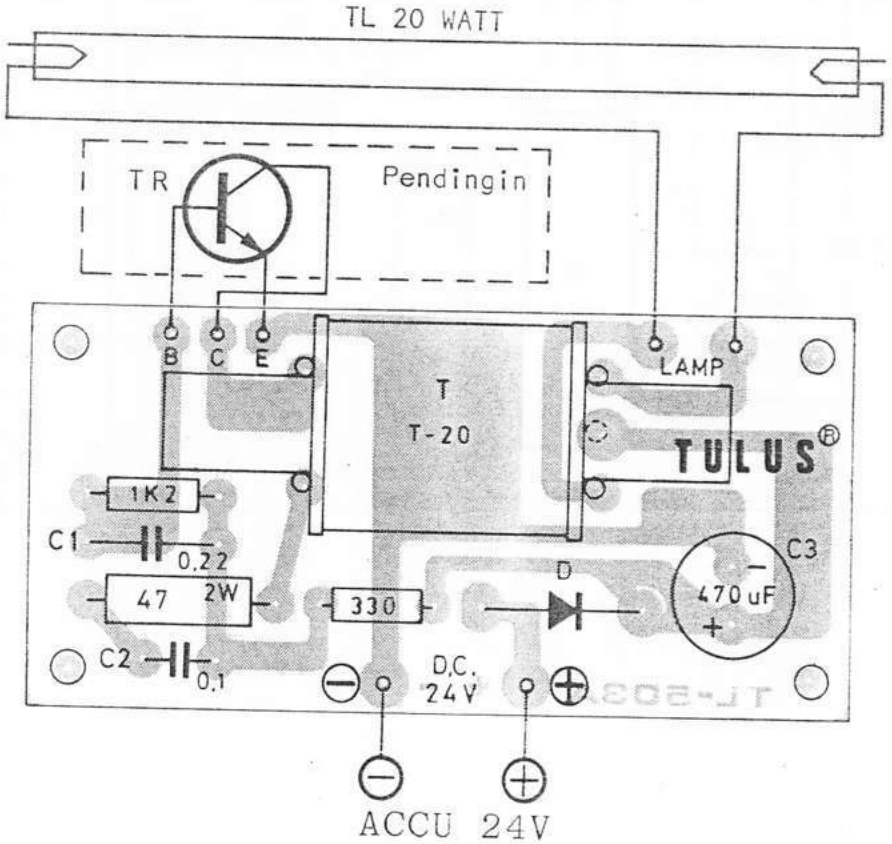

DC FLUORESCENT LAMP CONVERTER

(NEON ACCU 24V 20Watt)

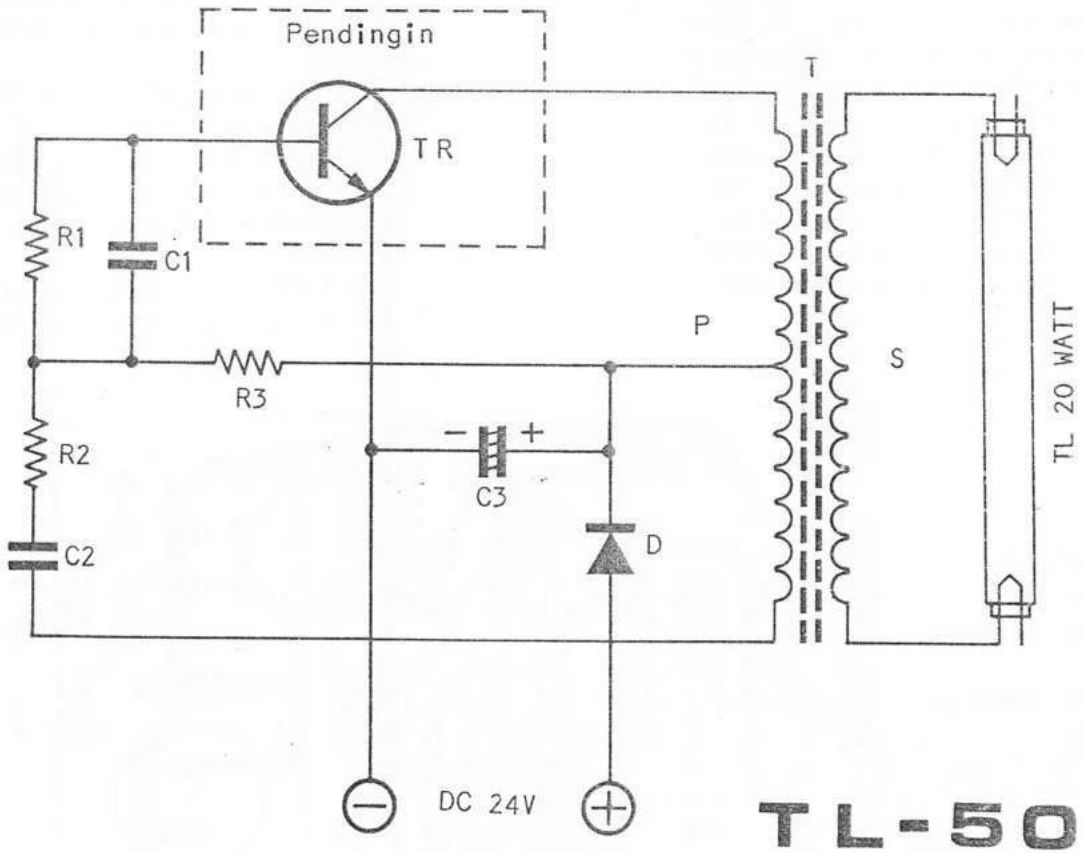

TL-503A

CIRCUIT DIAGRAM

TL-512

PARTS LIST

R1.10	2,2K
R2	1,8K
R3	2R2/5W
R4	1R5/5W
R5.6	1 K
R7	1,2K
R8	4,7K
R9	12K
R11	820
VR	10K

C1	1000uF50V
C2	10uF25V
TR1	CS9014
TR2	C 1061
SCR	TEC103D
IC	HH5316
D1.2.3.4.11	1N5402
D5.10	LED
D6.7.8	1N4002
D9	1N4148

S1.POWER dan START
S2.AC,110V/220V
S3.AC, 8V untuk charge battery 6V.
AC,16V untuk charge battery 12V.

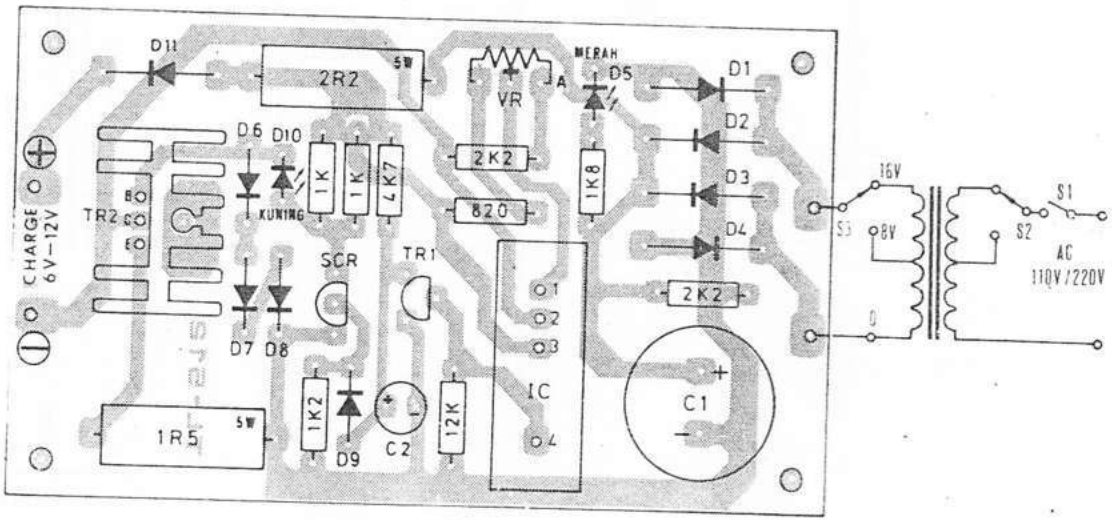

AUTOMATIC BATTERY CHARGER

(UNTUK BATTERY SEALED LEAD-ACID 6-12V. 1-10A.)

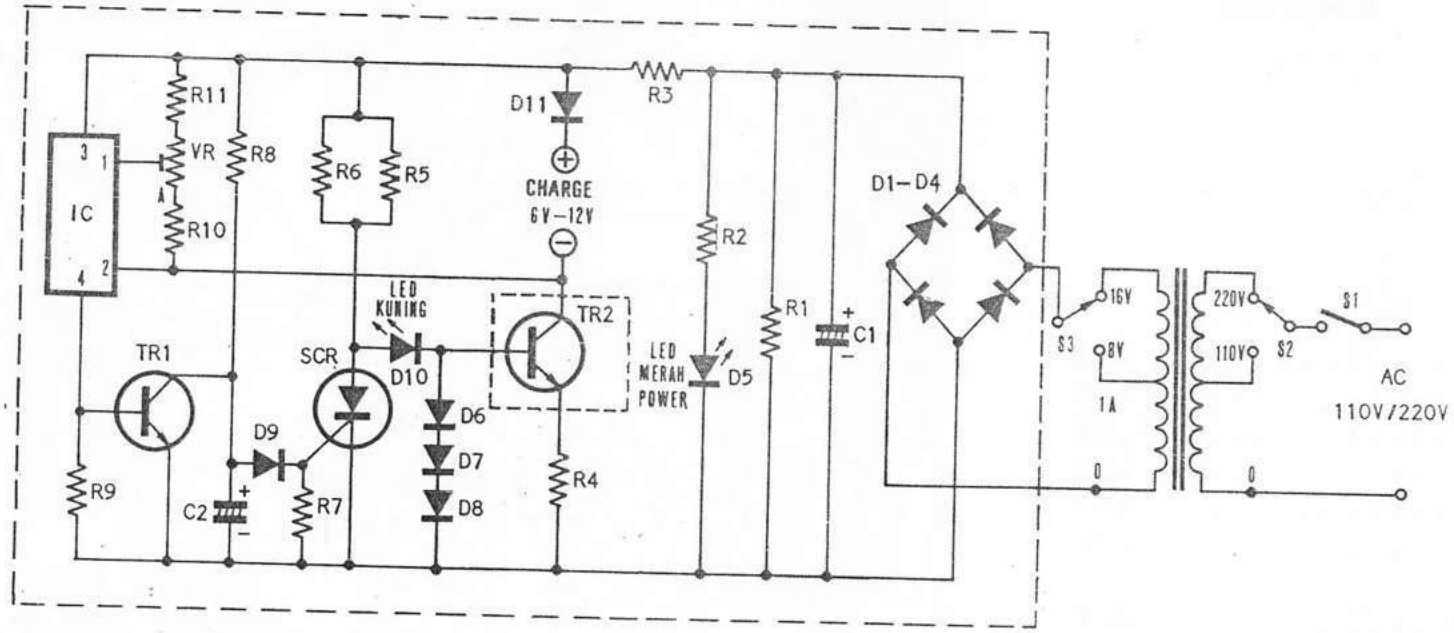

KETERANGAN :

- Setelah rangkaian dihubungkan dengan battery, putar VR ke titik A.
- S1 dikontakkan sehingga LED kuning menyala (tanda battery sedang dicharge).
- Setelah tegangan battery mencapai 8V (untuk battery 6V) / 16V(untuk battery 12V), VR diputar dari titik A perlahan-lahan sampai LED kuning tepat padam.
- Untuk selanjutnya rangkaian bekerja otomatis.

TL-512

CIRCUIT DIAGRAM

TL-611

PARTS LIST

R1.4.....	1 K
R2.7.....	12K
R3.....	5,6K
R5.6.....	10K
R8.....	820
VR.....	10K
C1.2.....	10uF
C3.....	0,1uF
C4.....	1 uF
C5.....	100uF
TR1-5.....	CS9013
D1-D20.....	LED
IC.....	MC14017

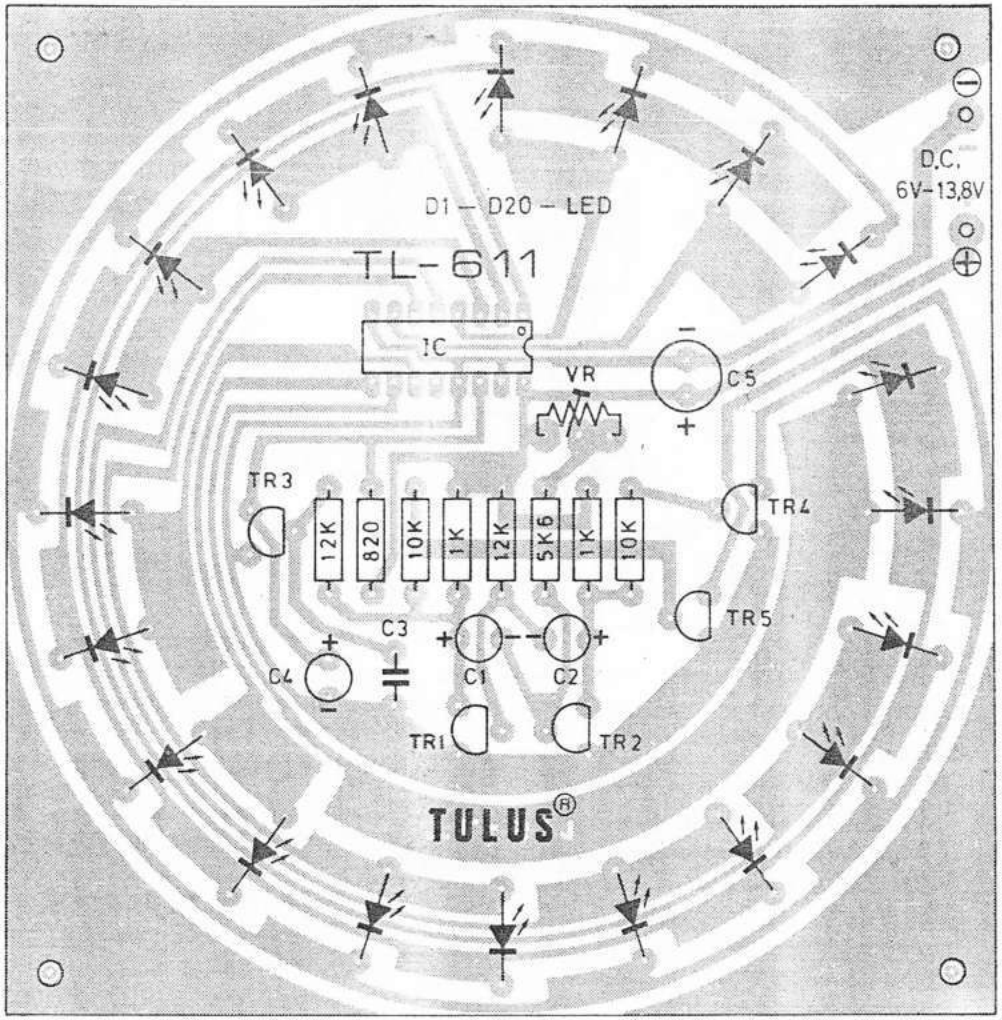

20 LED ELECTRONIC SIGN FLASHER

(NYALA SATU BERPUTAR)

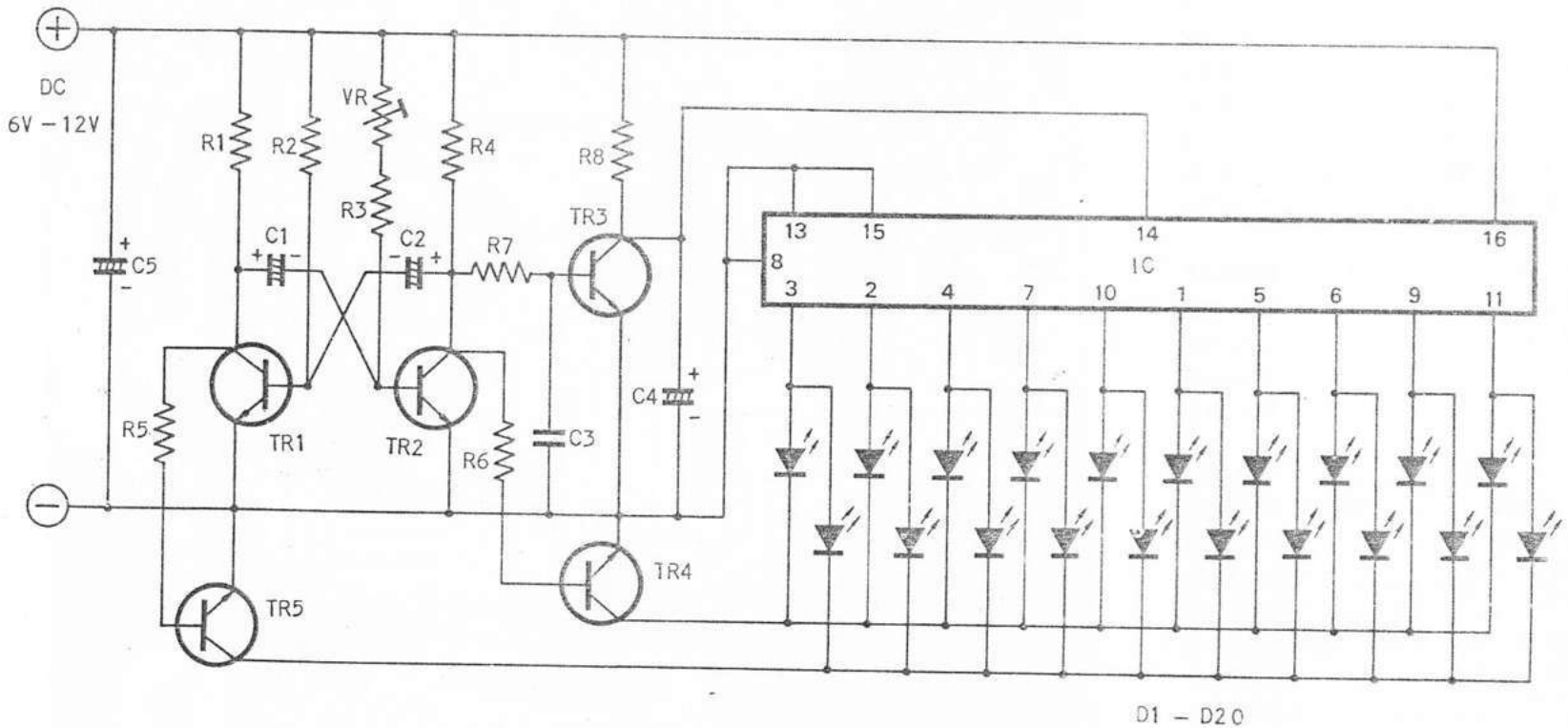

TL-611

CIRCUIT DIAGRAM

TL-611A

PARTS LIST

R1.3.9.....	100K
R2.....	47 K
R4.....	1 M
R5.8.....	1,2K
R6.....	22K
R7.....	220K
R10.....	1
R11 - 24.....	1 K
R25.26.....	820
C1.6.....	220uF
C2.....	33 uF
C3.....	0,22uF
C4.....	22KpF
C5.....	10 uF
D1 - 38.....	LED
D39.40.....	1N4148
D41.42.....	1N4002
TR1.....	2N4355
TR2.....	2N3569
TR3.4.15.16...	CS9014
TR5 - 14.....	CS9013
TR17.....	CS9012
IC1.....	TX9262
IC2.....	MC14017

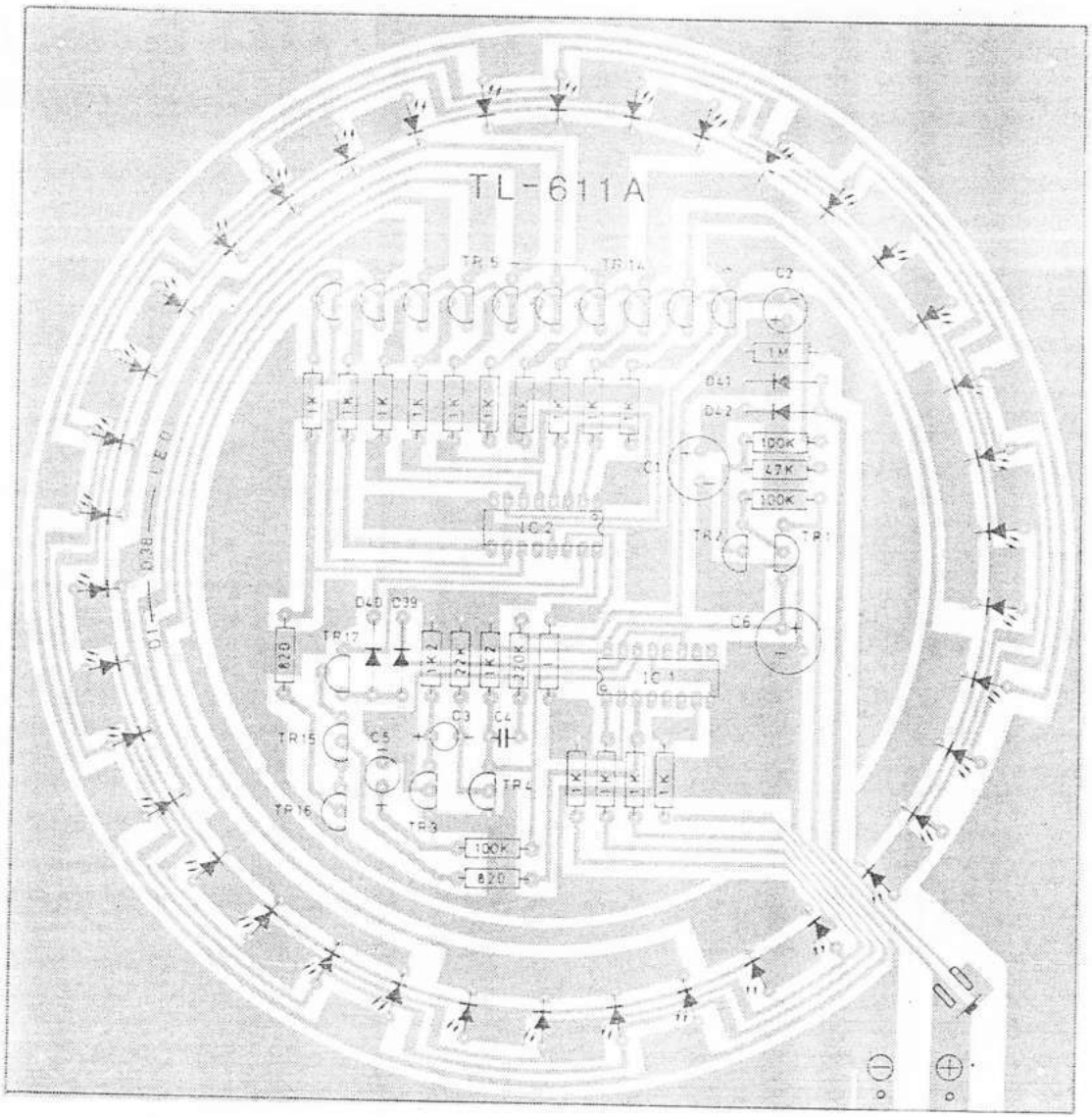

38 LED ELECTRONIC SIGN FLASHER

(ELECTRONIC ROULETTE.6-12VDC)

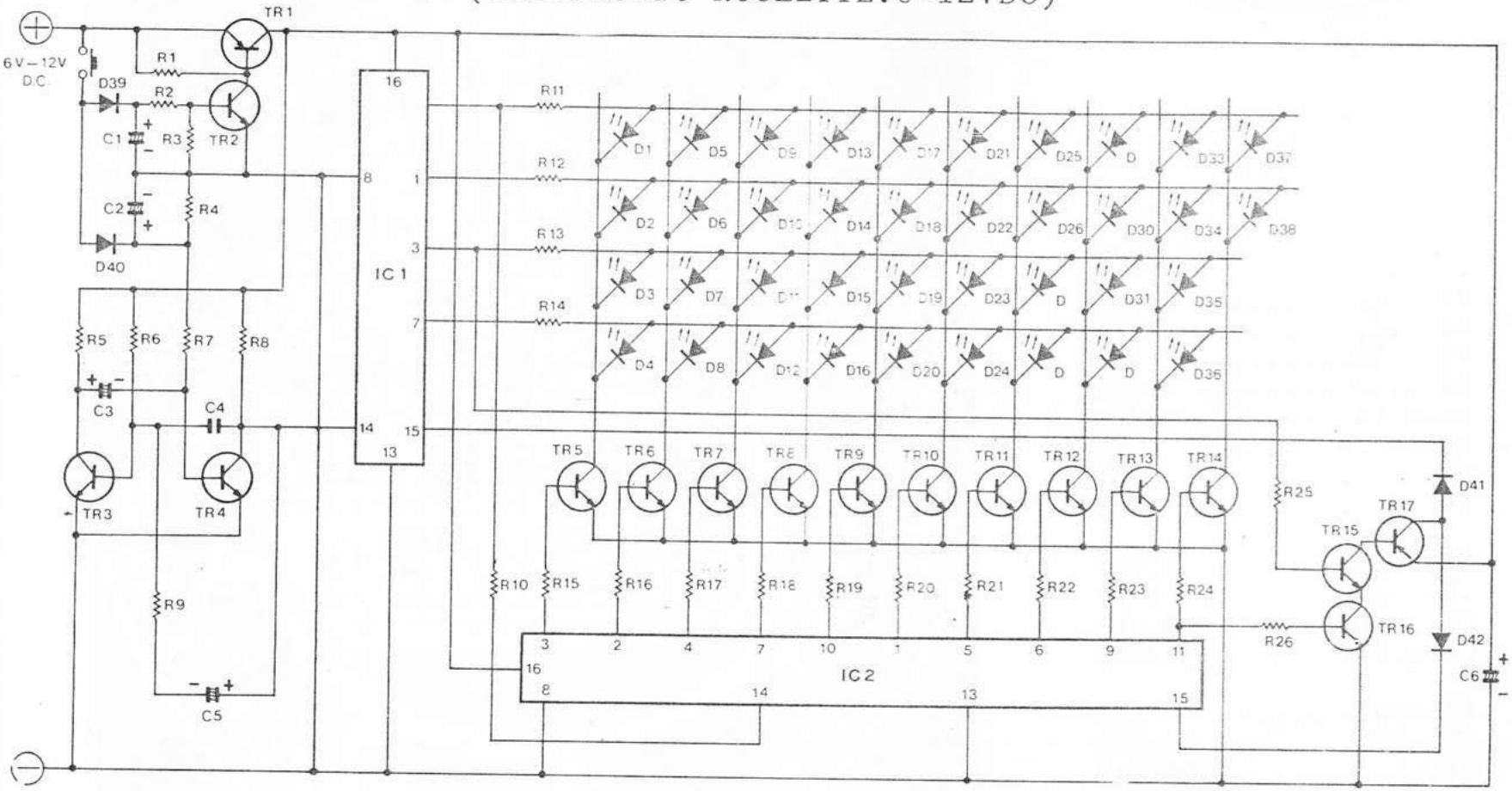

TL-611A

CIRCUIT DIAGRAM

TL-612

PARTS LIST

R1.....	820
R2.....	10K
R3.7.11.....	560
R4.8.12.....	680
R5.9.13.....	470
R6.10.14.....	1,2K
R15.....	33
VR.....	1 K
C1.....	100uF
C2.....	1 uF
C3.....	0,1uF
C4.5.6.....	33uF
D1-D30.....	LED
D31-39.....	1N4002
TR1.....	CS9014
TR2-7.....	CS9013
IC.....	MC14017

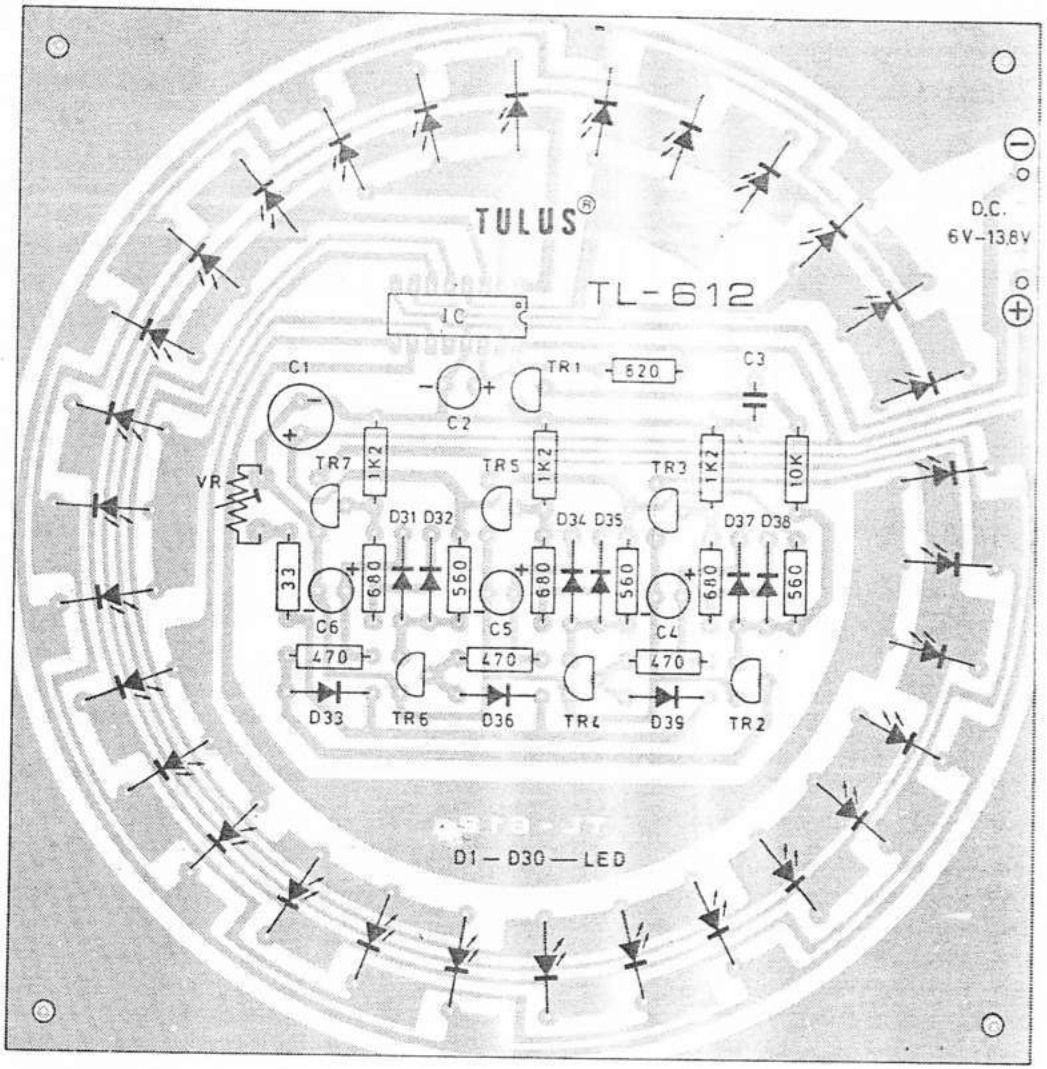

30 LED ELECTRONIC SIGN FLASHER

(NYALA SATU BERPUTAR)

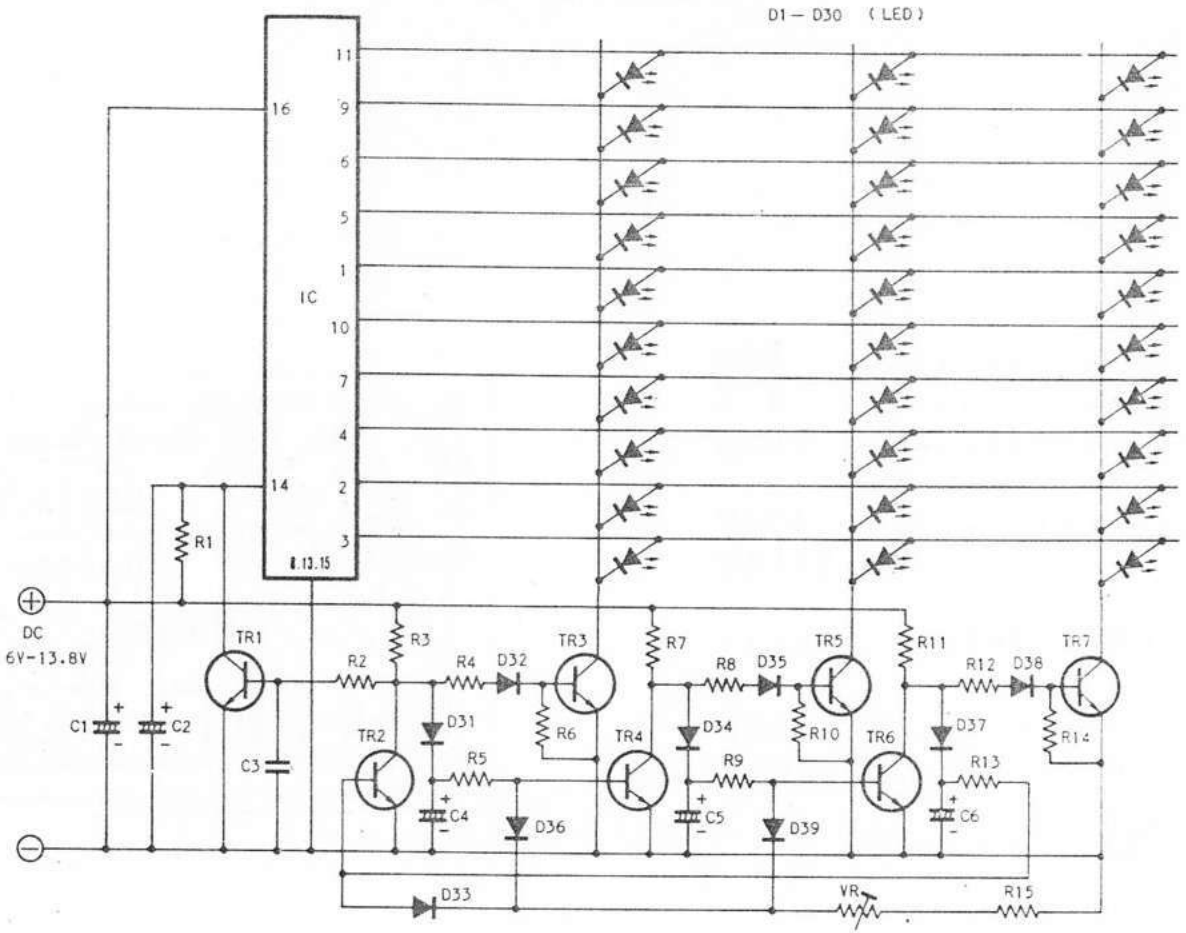

TL-612

CIRCUIT DIAGRAM

TL-614

PARTS LIST

R1..... 220
R2..... 1 K
VR..... 100K

C1..... 47uF
C2..... 22KpF

D1-5....LED (2WARNA 3KAKI)

IC1..... MC 1455
IC2..... MC14017

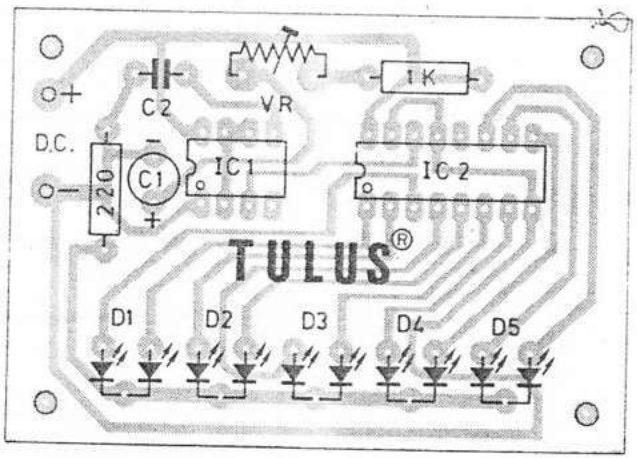

RUNNING LED

(5 LED 2 WARNA)

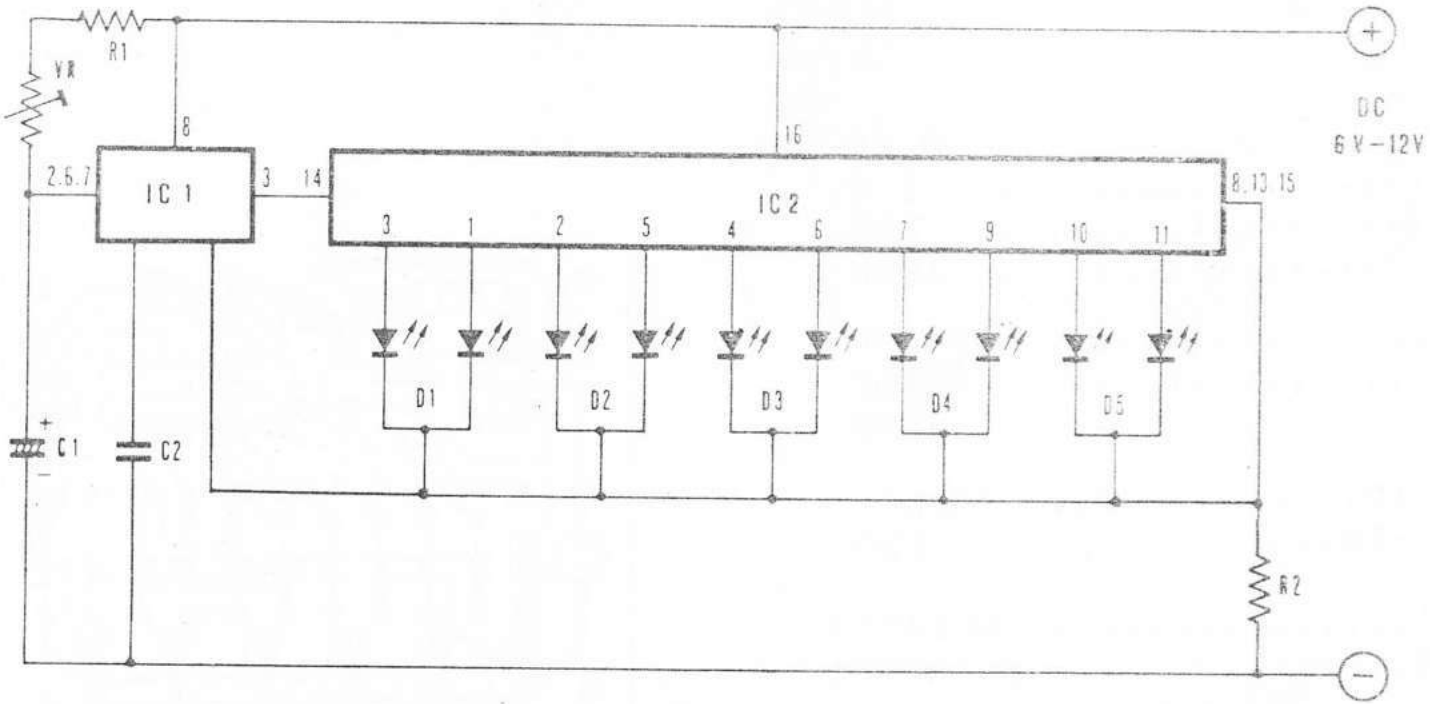

TL-614

CIRCUIT DIAGRAM

TL-615

PARTS LIST

R1..... 3,3K
R2..... 1 K
R3..... 220
VR..... 100K

C1.....47uF
C2..... 22KpF
C3..... 10uF

D1-10..... 1N4002
D11-16..... LED

IC1..... MC1455
IC2..... MC14017

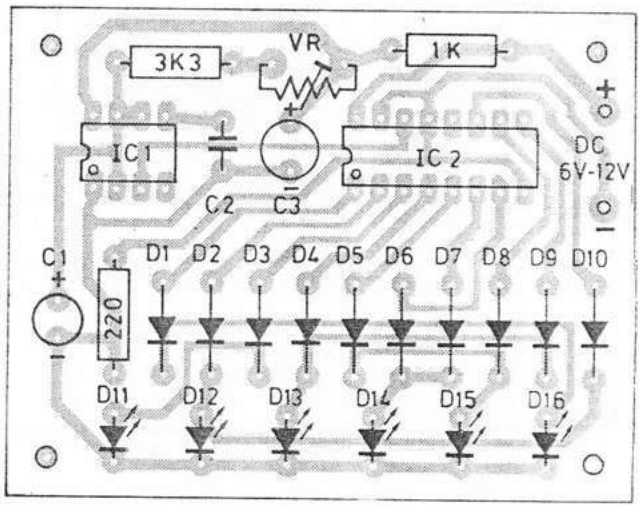

RUNNING LED

(6 LED BOLAK-BALIK)

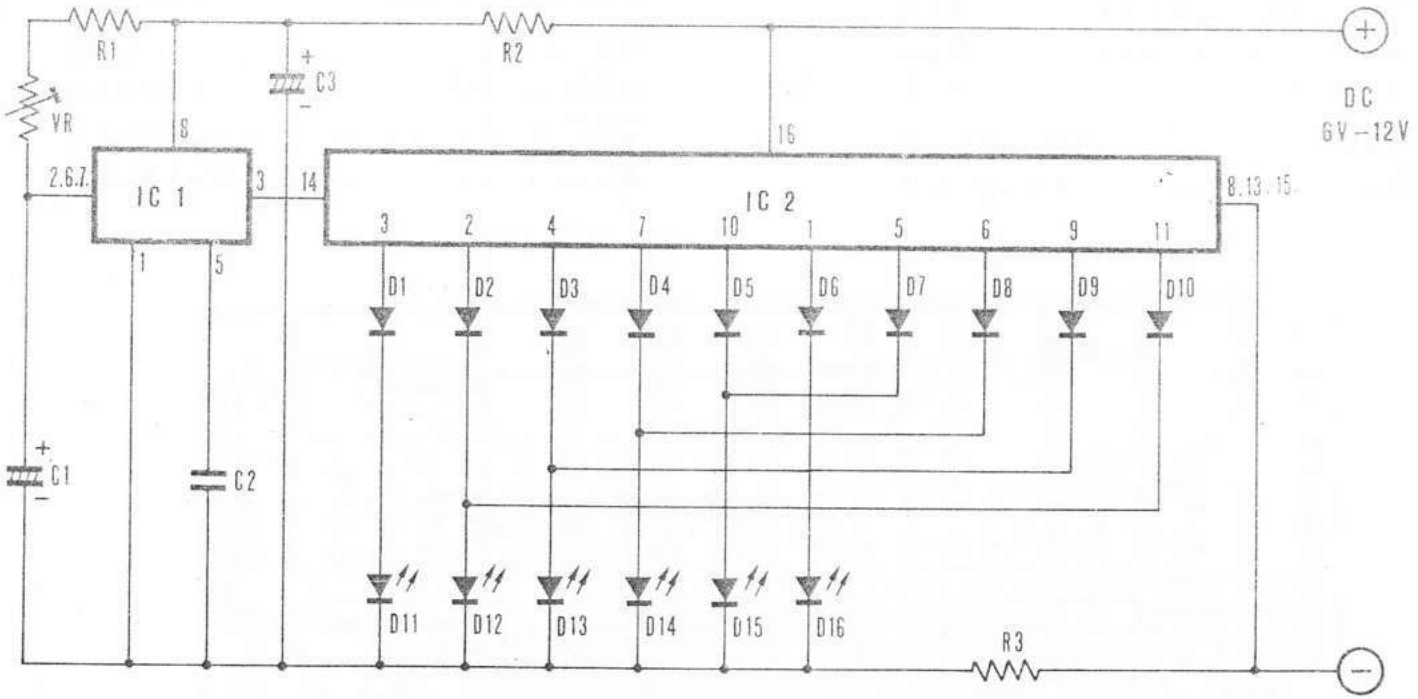

TL-615

CIRCUIT DIAGRAM

TL-615A

PARTS LIST

R1.4..... 1 K
R2.3..... 2,2K
R5.6.7..... 12K
R8..... 820
VR..... 10K

C1..... 100uF25V
C2.3..... 10uF16V

C4..... 0,1uF50V
C5..... 1uF16V

D1 - 11..... LED
D12 - 33..... 1N4148
TR1 - 5..... CS9013
IC..... MC14017

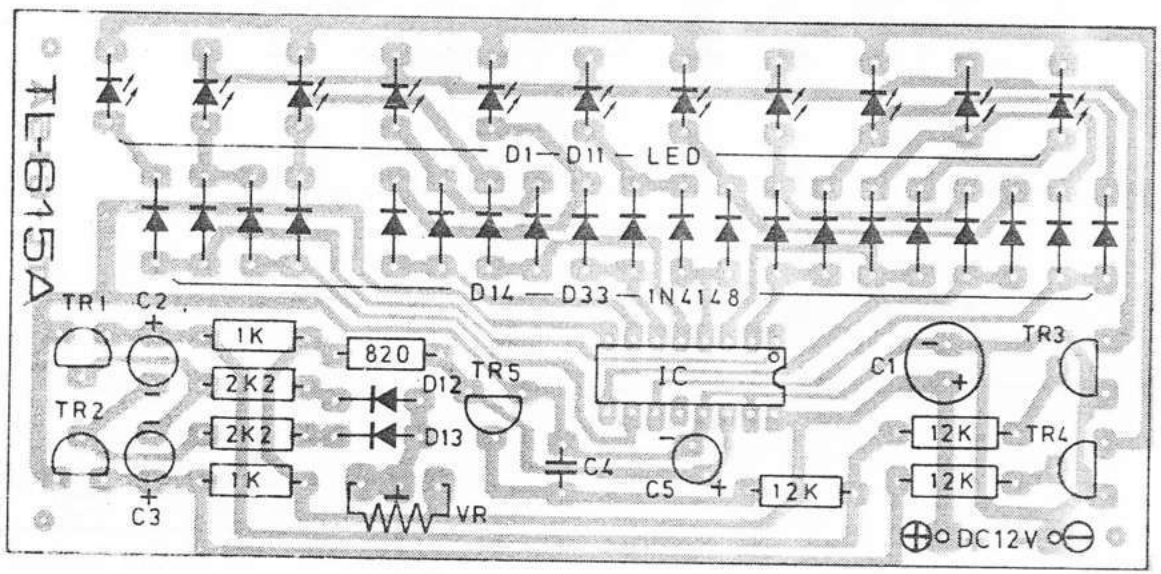

RUNNING LED

(11 LED BOLAK BALIK)

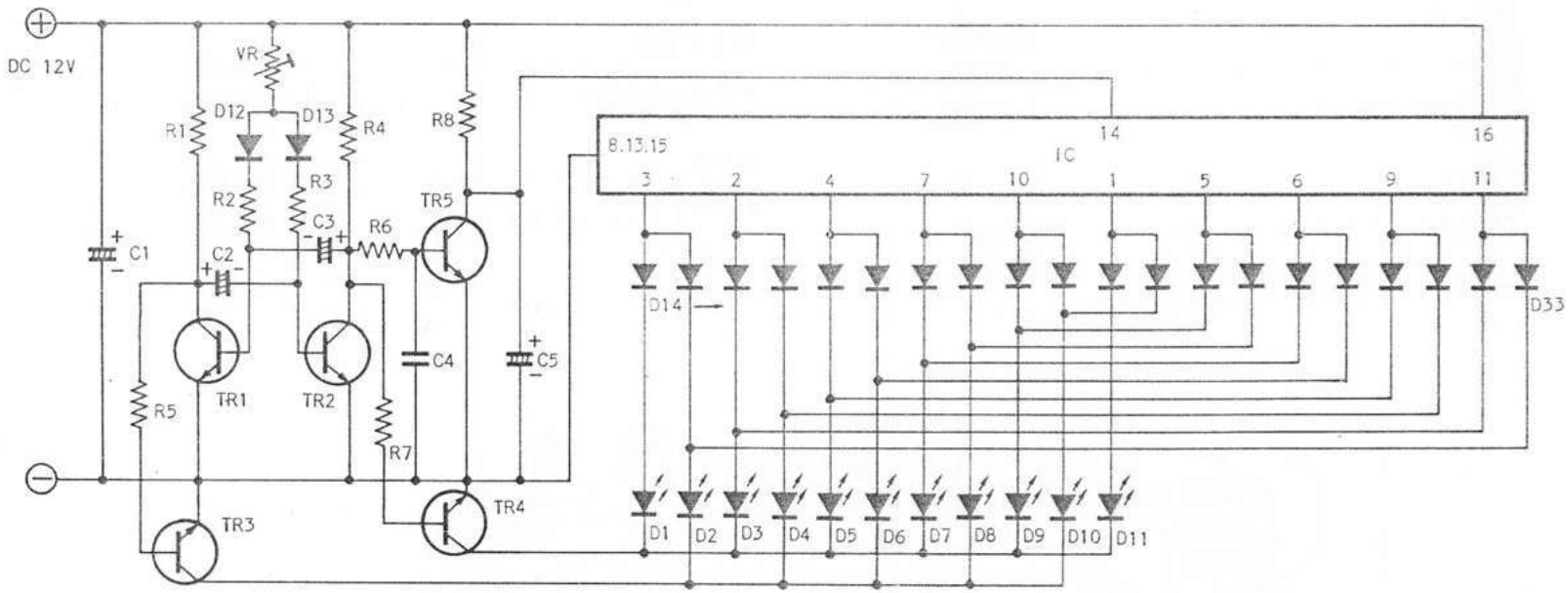

TL-615A

CIRCUIT DIAGRAM

TL-616

PARTS LIST

R1	2,2K
R2	100
VR	100K
C1	22uF
C2	22KpF
C3	47uF
D1-10	LED
D11	1N4002
IC1	MC 1455
IC2	MC14017

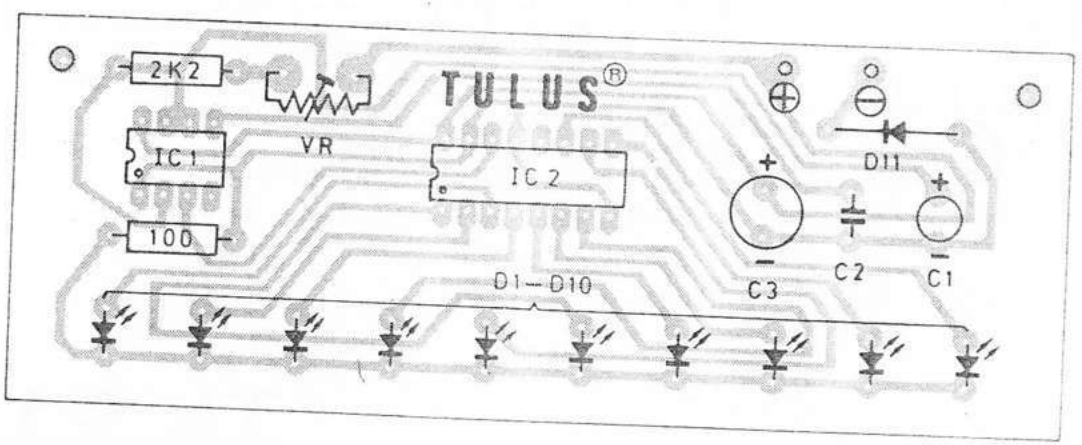

RUNNING LED

(10 LED)

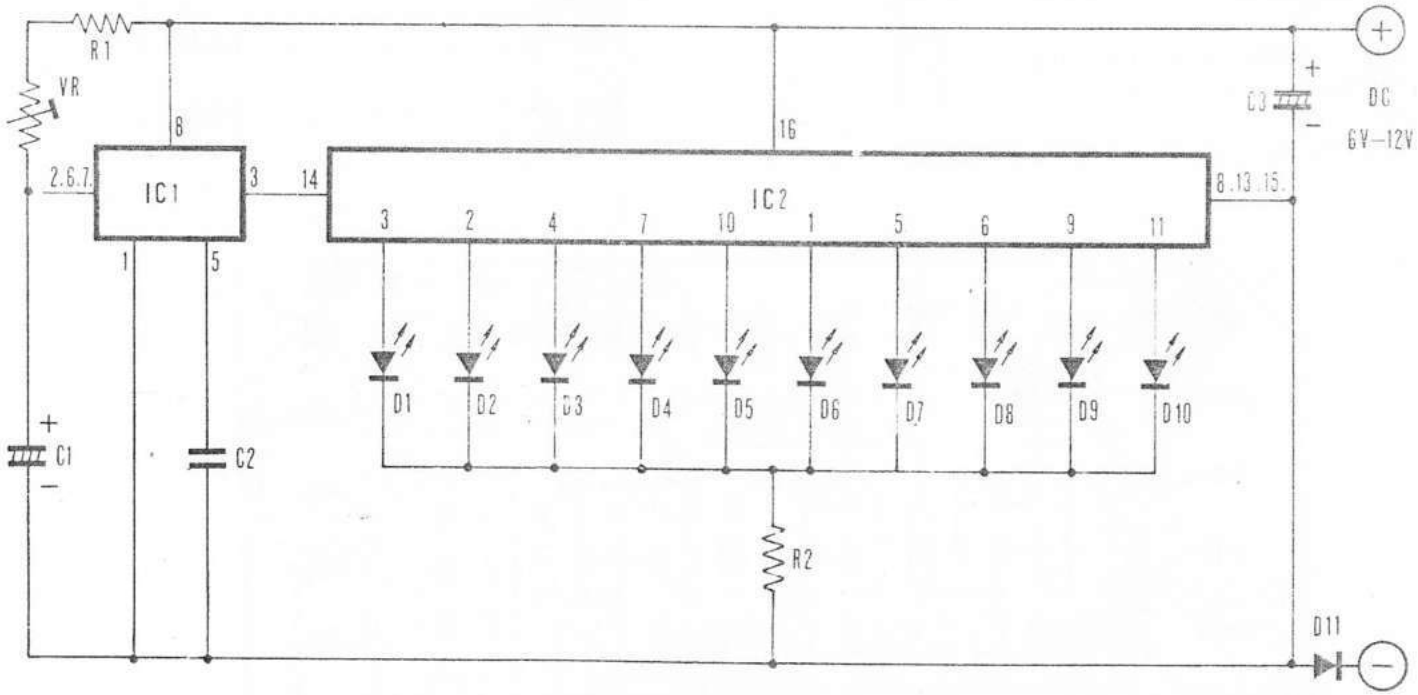

TL-616

CIRCUIT DIAGRAM

TL-622

PARTS LIST

R1.2.3	1,8K
R4	1 K
VR1.2.3	2 K
VR4	5 K
C1.2.3	100uF
D1-36	LED
D37-45	1N4002
TR1.3.5	CS9012
TR2.4.6	CS9015

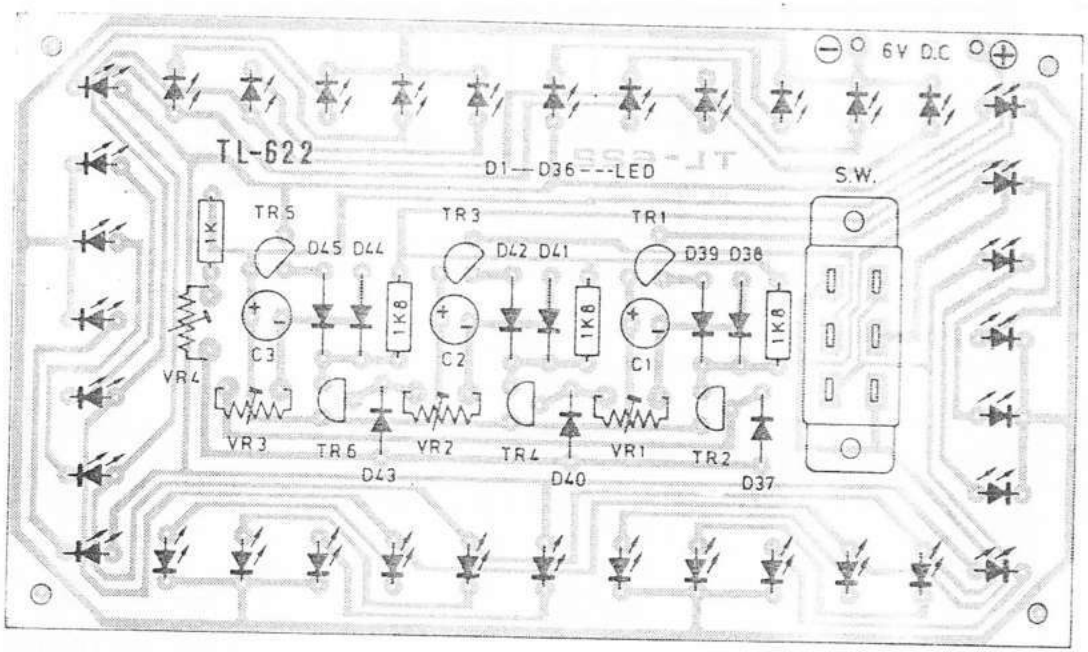

RUNNING LED (6V)

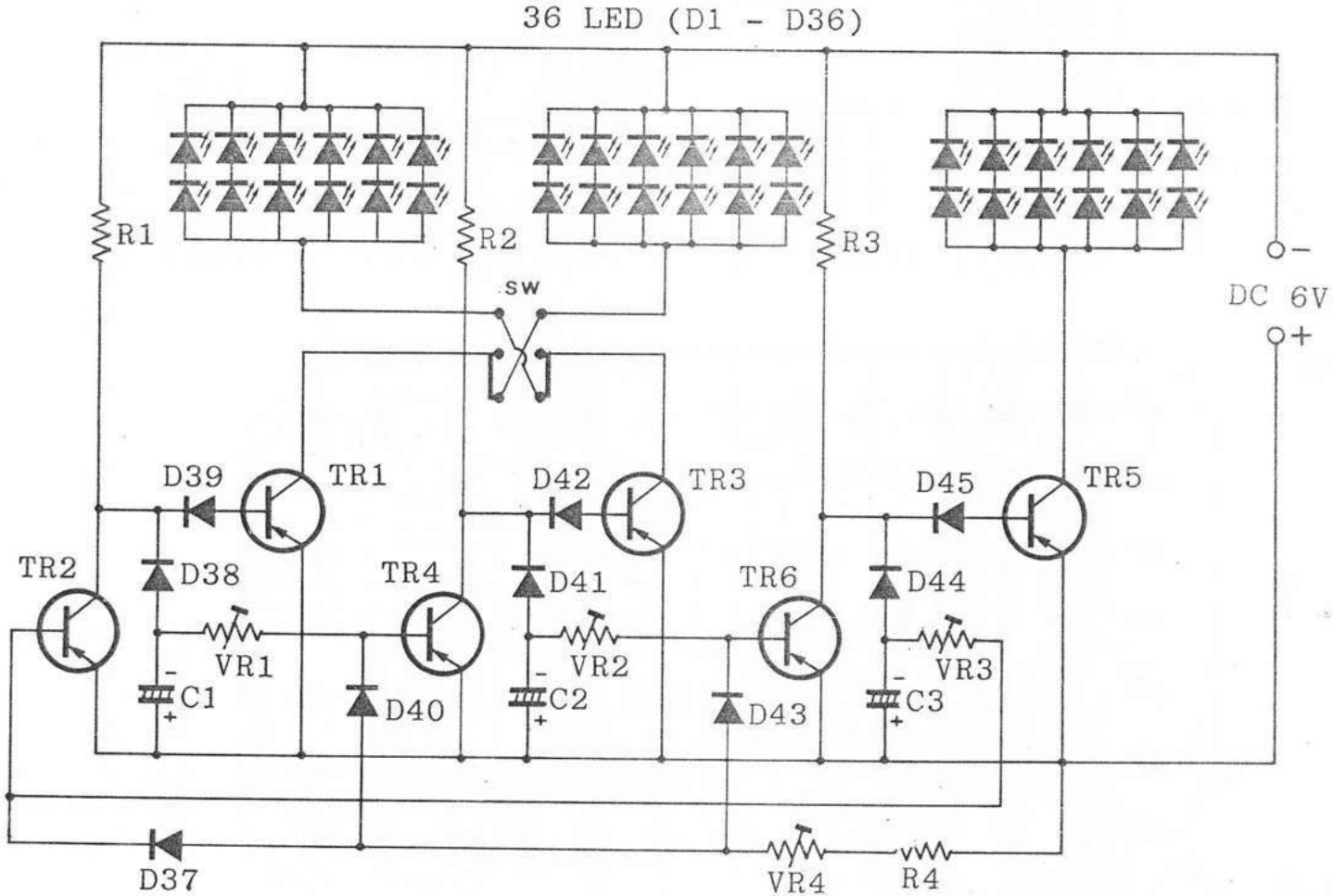

TL-622

CIRCUIT DIAGRAM

TL-623

PARTS LIST

R1.2.3.....	1,8K
R4.....	1 K
VR1.2.3.....	2 K
VR4.....	5 K
C1.2.3.....	100uF

D1-36.....	LED
D37-45.....	1N4002
TR1.3.5.....	CS9012
TR2.4.6.....	CS9015

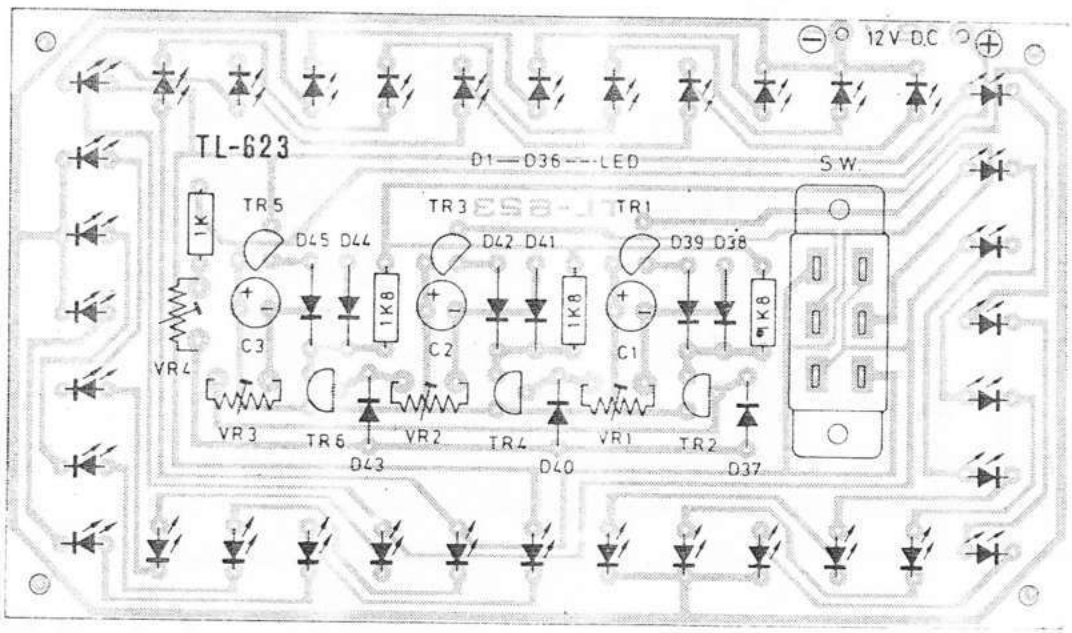

RUNNING LED (12V)

36 LED (D1 - D36)

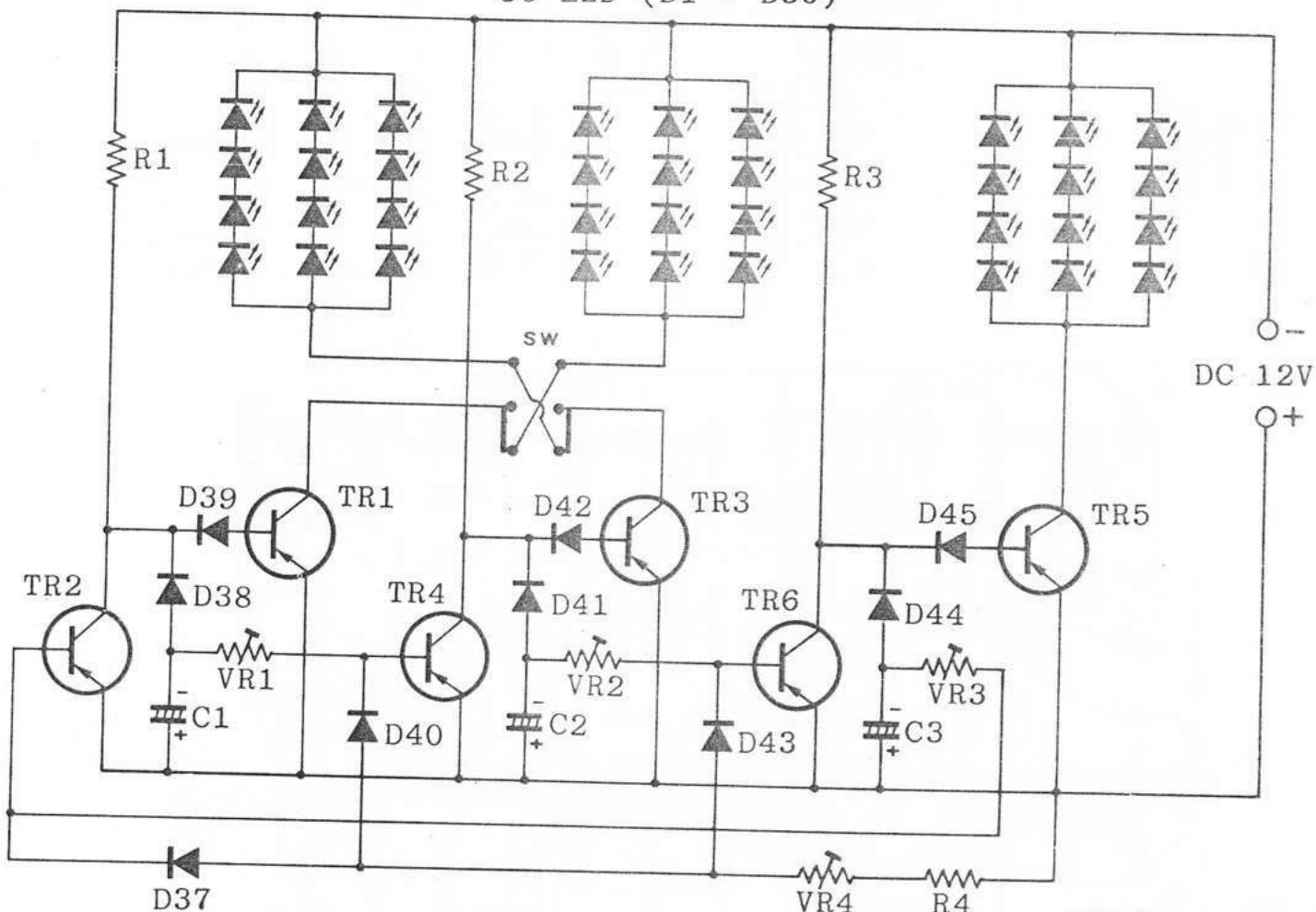

TL-623

CIRCUIT DIAGRAM

TL-624

PARTS LIST

R1.4.7.....	390	C1.2.3.....	470uF
R2.5.8.....	10		
R3.6.9.....	180	D1-36.....	LED
R10.....	150	D37-42.....	1N4002
VR.....	2 K	TR1.2.3.....	CS9012

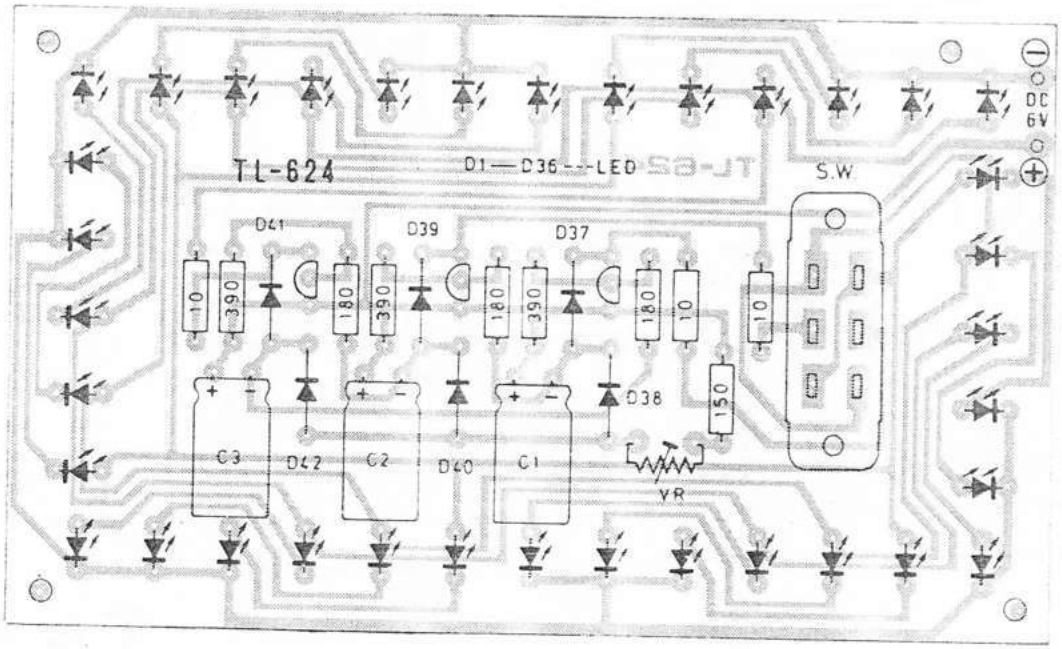

RUNNING LED (6V)

36 LED (D1 - D36)

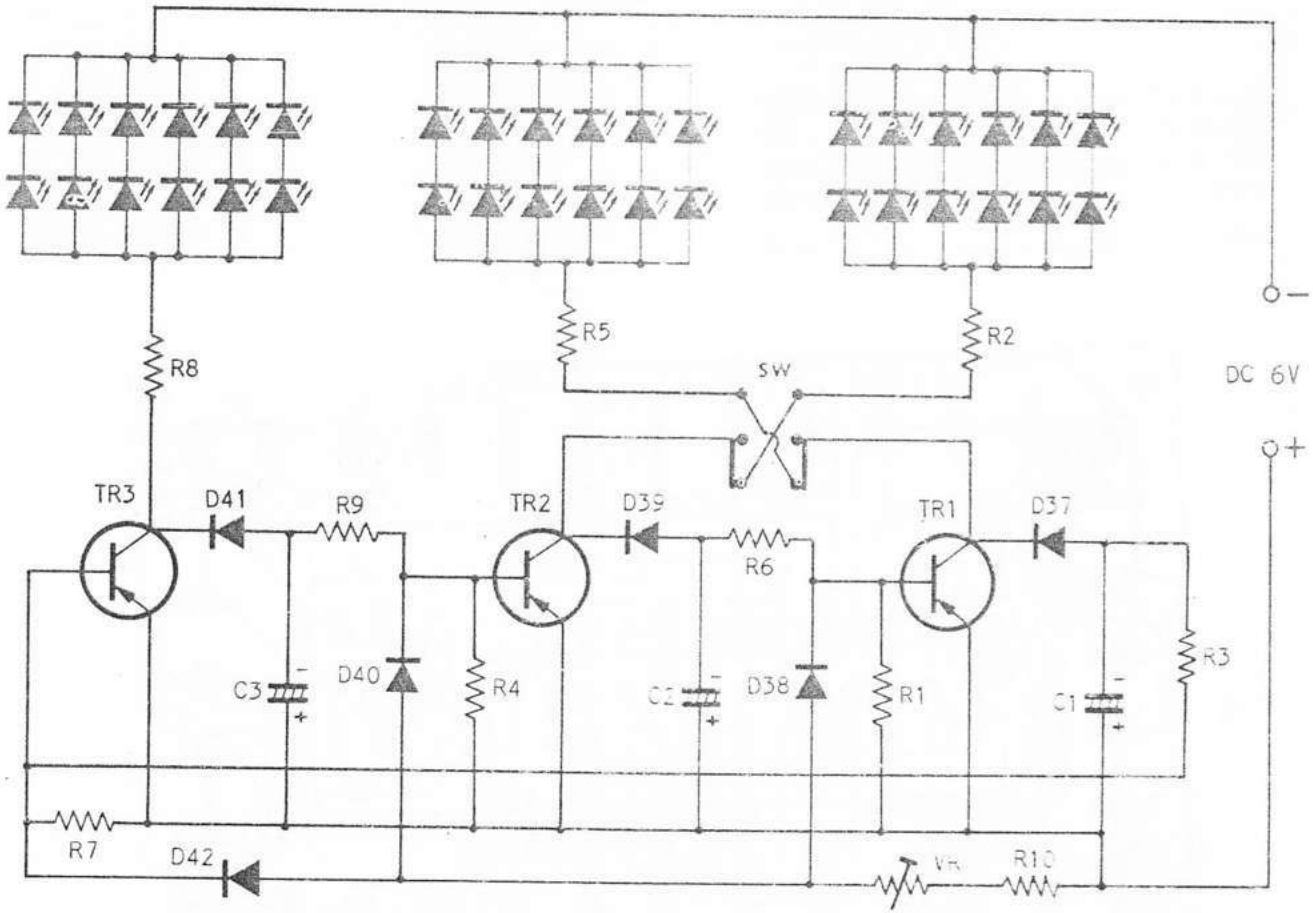

TL-624

CIRCUIT DIAGRAM

TL-625

PARTS LIST

R1.4.7.....	390	C1.2.3.....	220uF
R2.5.8.....	10		
R3.6.9.....	180	D1-36.....	LED
R10.....	150	D37-42.....	1N4002
VR.....	2 K	TR1.2.3.....	CS9012

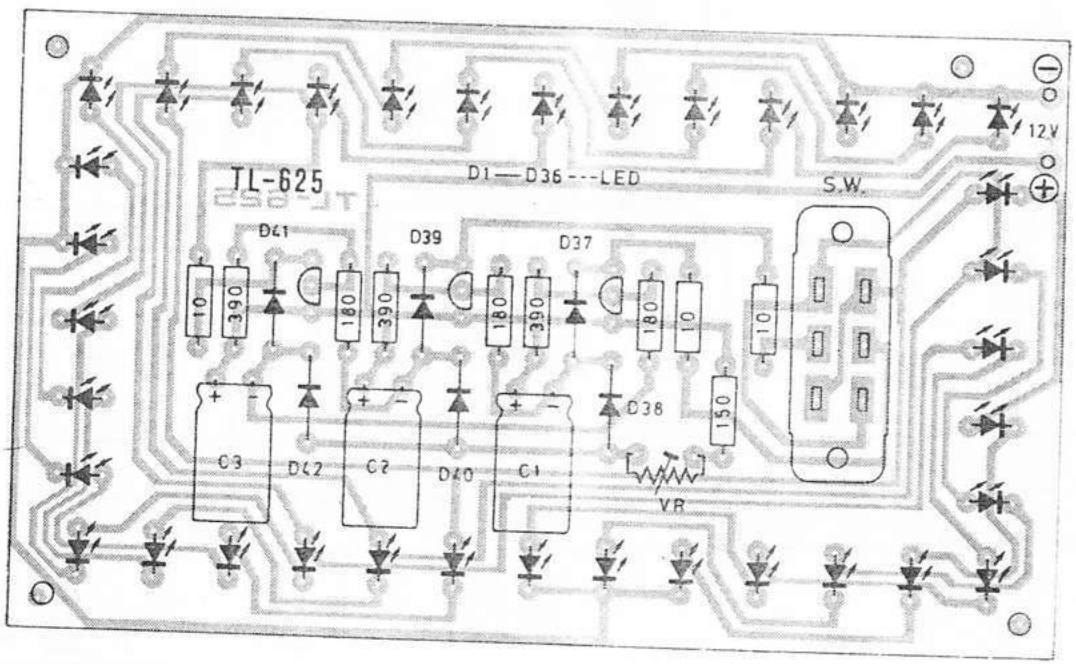

RUNNING LED (12V)

36 LED (D1 - D36)

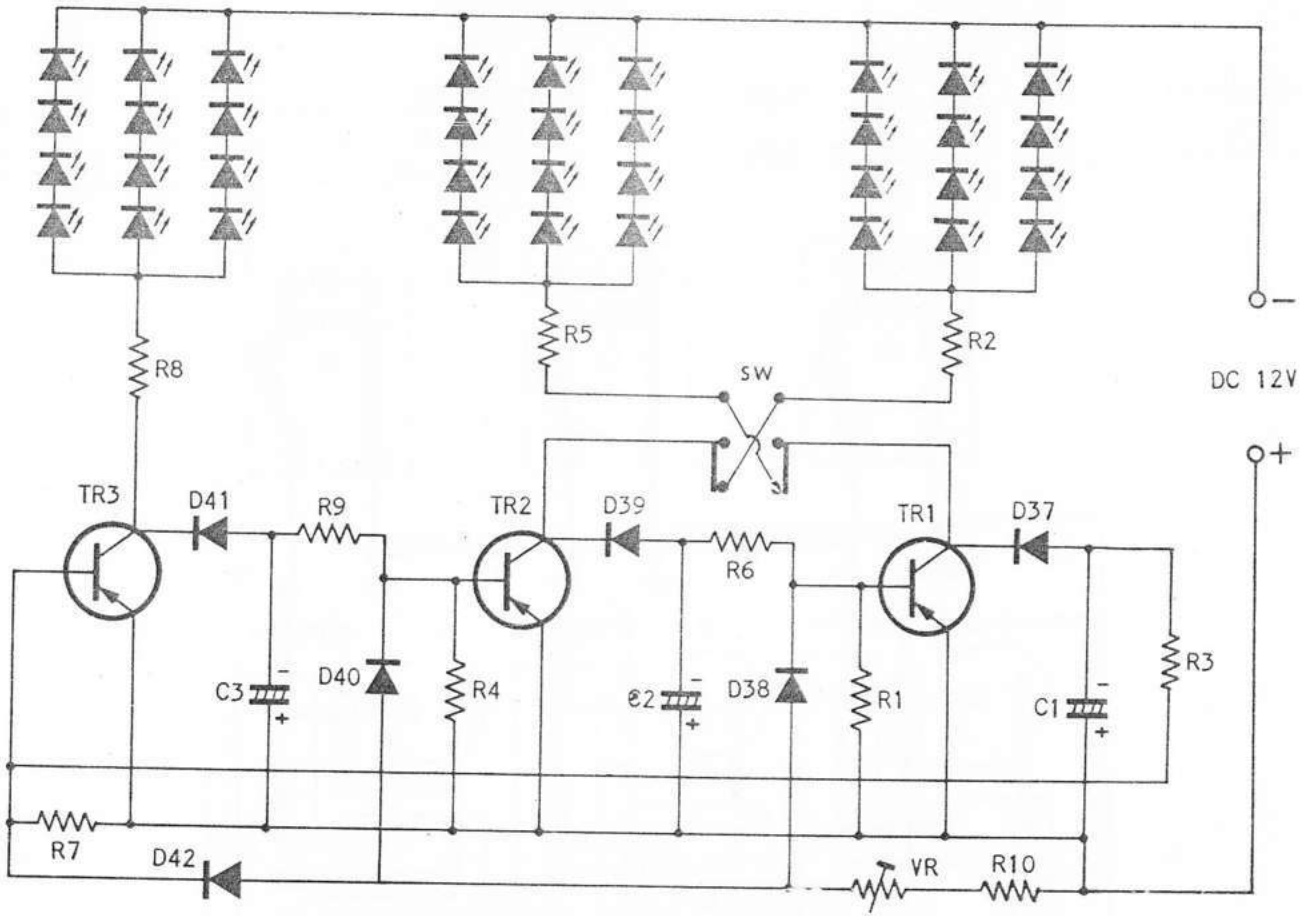

TL-625

CIRCUIT DIAGRAM

TL-666B

PARTS LIST

R1.2.3..... 220

C1.2.3..... 1000uF 10V

D1.2.3..... DZD 8V8

D4.5.6..... LED

RL1.2.3..... RELAY 12V

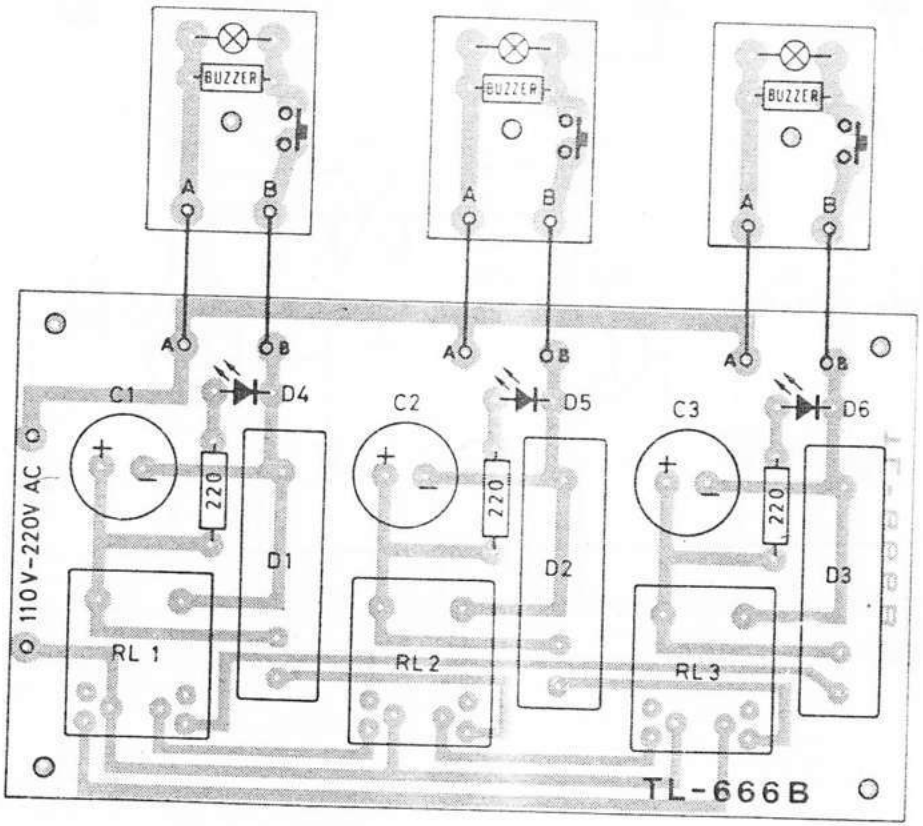

CEPAT - TEPAT

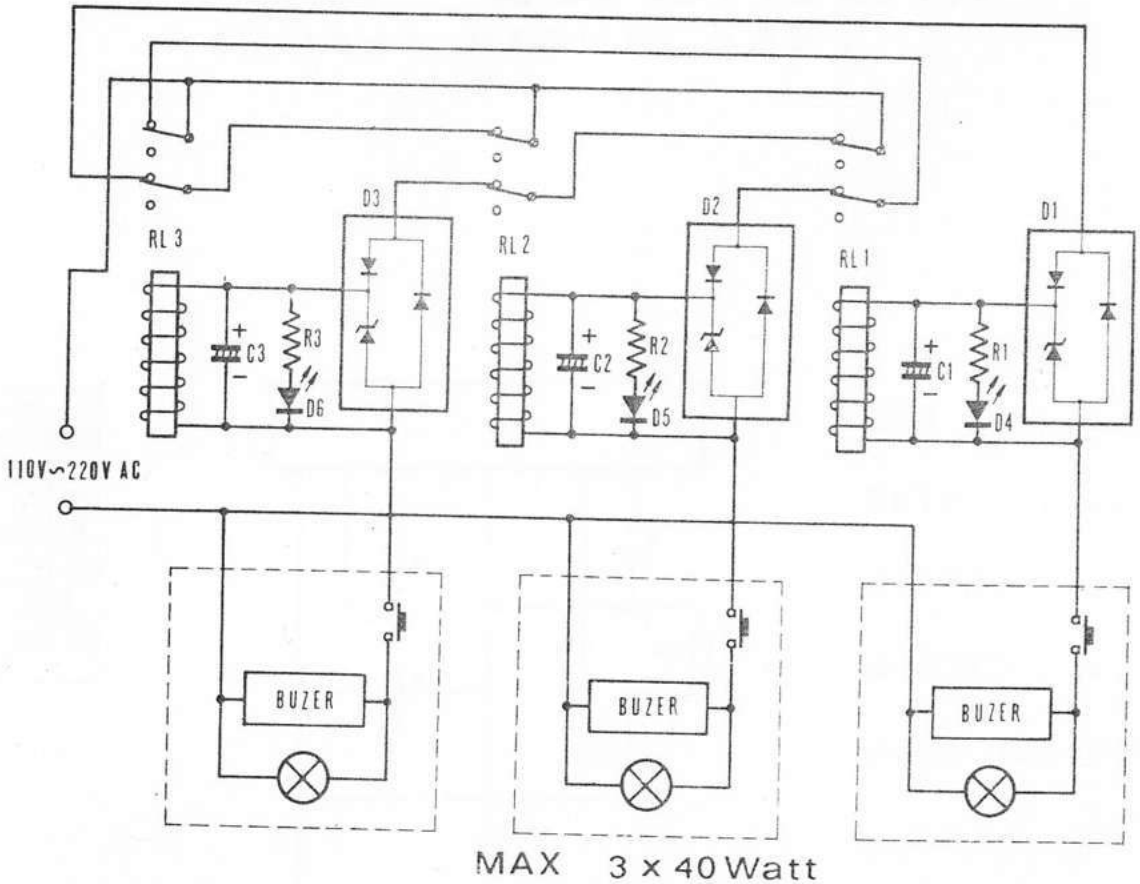

TL-666B

CIRCUIT DIAGRAM

MUSICAL BELL

(BEL MUSIK 1LAGU)

R..... 82K

C..... 47uF

TR..... CS9013

IC..... CIC285

SP..... Speaker 8ohm

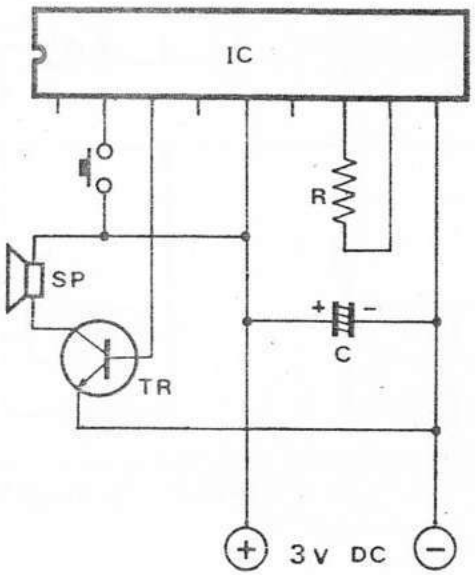

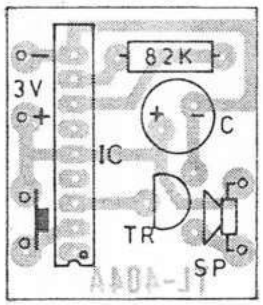

TL-404A

LAMP DIMMER CONTROL

R1..... 1 K
R2..... 10K
VR..... 1 M

C1.2..... 0,033uF/250V

TRIAC..... Q4004LT

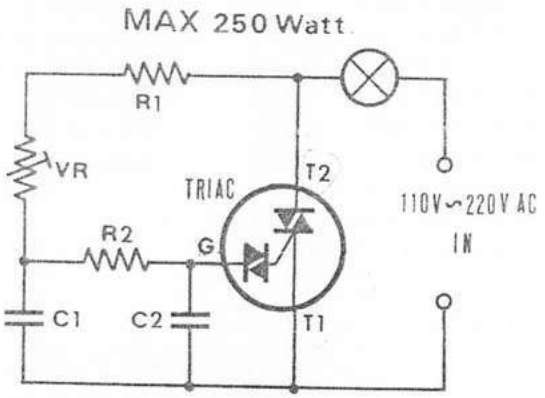

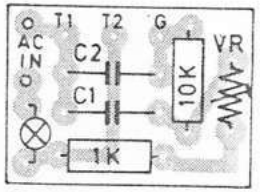

TL-1030

TL-1031

PARTS LIST

R1	390	C1	1000uF25V	TR1	2N3569
R2	1,5K	C2	0,47uF16V	TR2.3	CS9013
R3.6.8	2,2K	C3.4	220uF16V	TR4	CS9012
R4.5	33K	C5.6	0,022uF400V	D1	1N4002
R7	68K	C7	2200uF10V	D2	ZD 18V
R9	470	C8	1000uF16V	TRIAC	Q4004LT
R10	820K			IC	DMC033
R11	10K			T	P:220V S:15V
VR	B50K				

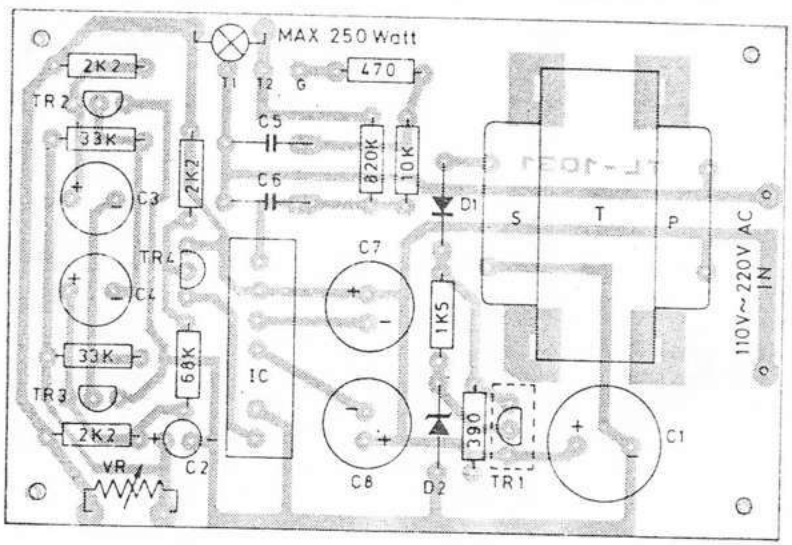

AUTOMATIC LAMP DIMMER CONTROL

(REDUP TERANG BERGANTIAN, KONTINUE UNTUK 1 LAMPU)

MAX 250 Watt

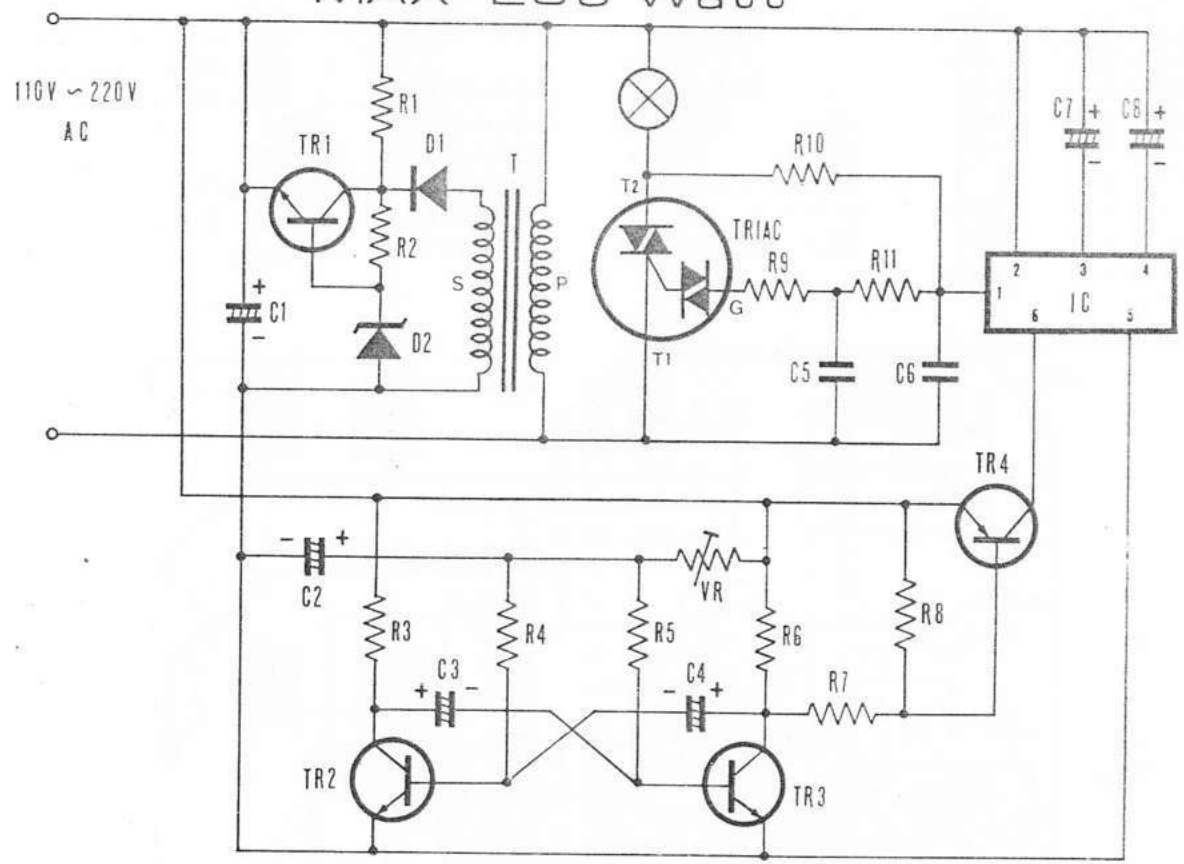

TL-1031

CIRCUIT DIAGRAM

TL-1032

PARTS LIST

R1	390
R2	1,5K
R3.5.8.10	2,2K
R4.11	68K
R6.7	33K
R9	1 K
R12.15	820K
R13.16	470
R14.17	10K

VR	B50K
C1.2.3.4	0,022uF400V
C5.7	2200uF10V
C6.8	1000uF16V
C9	1000uF25V
C10.11	220uF16V
C12	0,47uF16V

TR1	2N3569
TR2.3	CS9013
TR4.5	CS9012
D1	1N4002
D2	ZD 18V
TRIAC1.2	Q4004LT
IC1.2	DMC033
T	P:220V S:15V

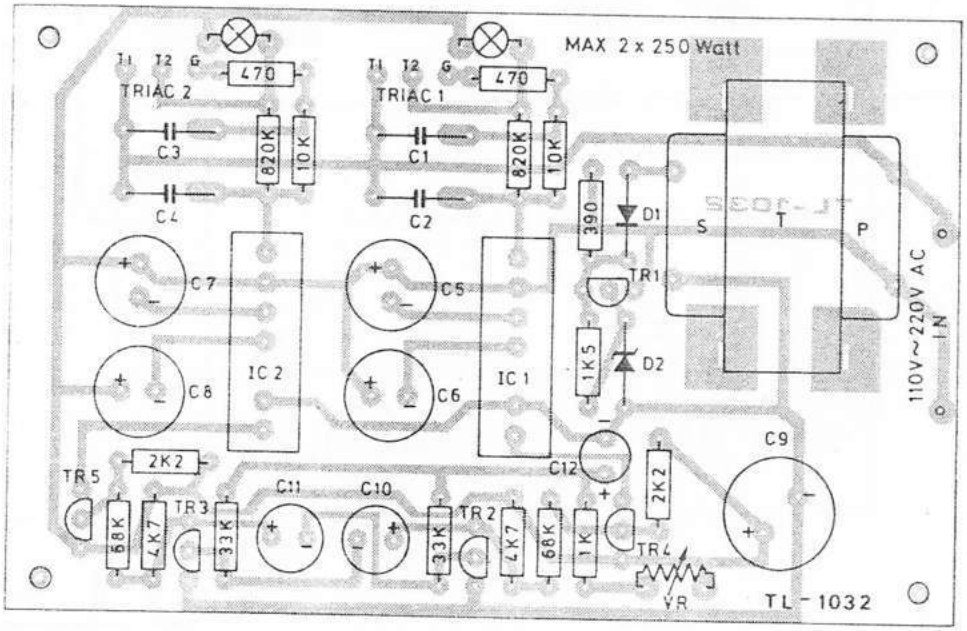

2 WAY AUTOMATIC LAMP DIMMER CONTROL

(REDUP TERANG BERGANTIAN, KONTINUE UNTUK 2 LAMPU)

MAX 2 x 250 Watt

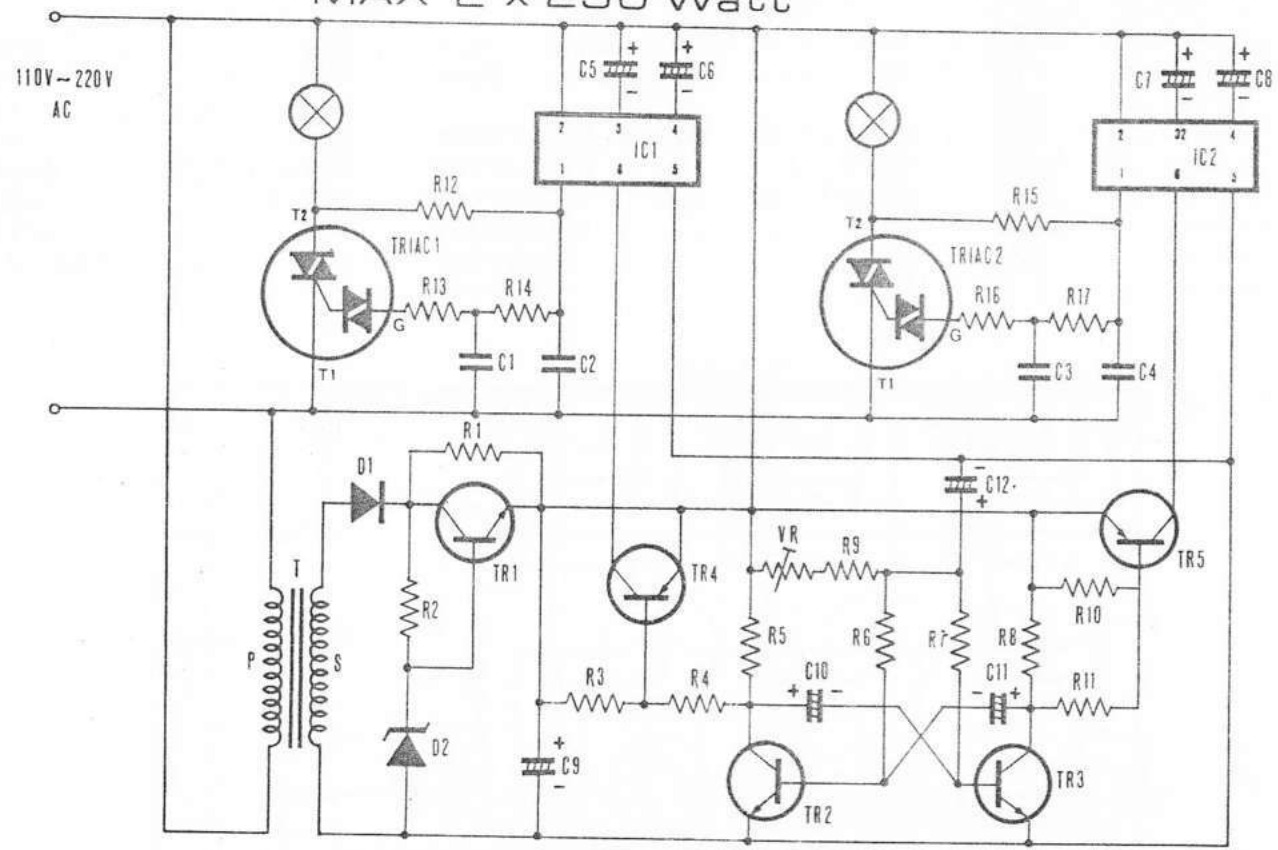

TL-1032

CIRCUIT DIAGRAM

TL-1033

PARTS LIST

R1.4.7.....	820K	R18.....	47K	TR1.....	2N3569
R2.5.8.....	470	VR.....	B50K	TR2.3.4.....	CS9014
R3.6.9.16.....	10K			D1.....	1N4002
R10.....	390	C1.2.3.4.5.6..	0,022uF400V	D2.....	ZD 18V
R11.....	1,5K	C7.9.11.....	2200uF10V	TRIAC1.2.3...	Q4004LT
R12.15.....	2,2K	C8.10.12.....	1000uF16V	IC1.2.3.....	DMC033
R13.....	4,7K	C13.....	1000uF25V	IC4.....	MC14017
R14.....	22K	C14.15.....	220uF16V	T.....	P:220V S:15V
R17.....	1 K	C16.....	10uF16V		

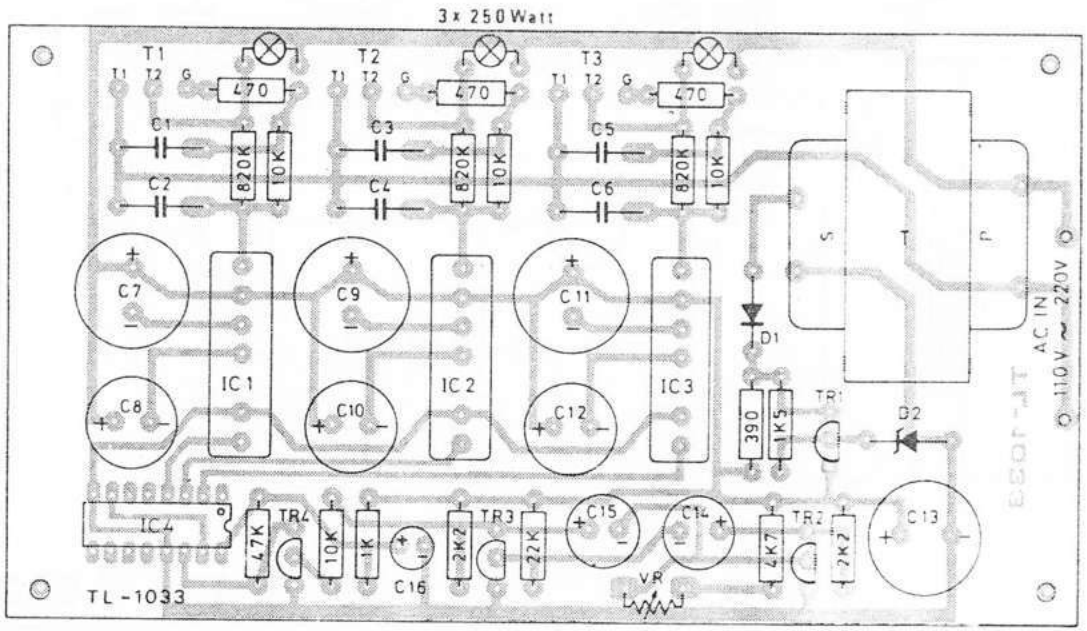

3 WAY AUTOMATIC LAMP DIMMER CONTROL

(REDUP TERANG BERGANTIAN, KONTINUE UNTUK 3 LAMPU)

3 × 250 Watt

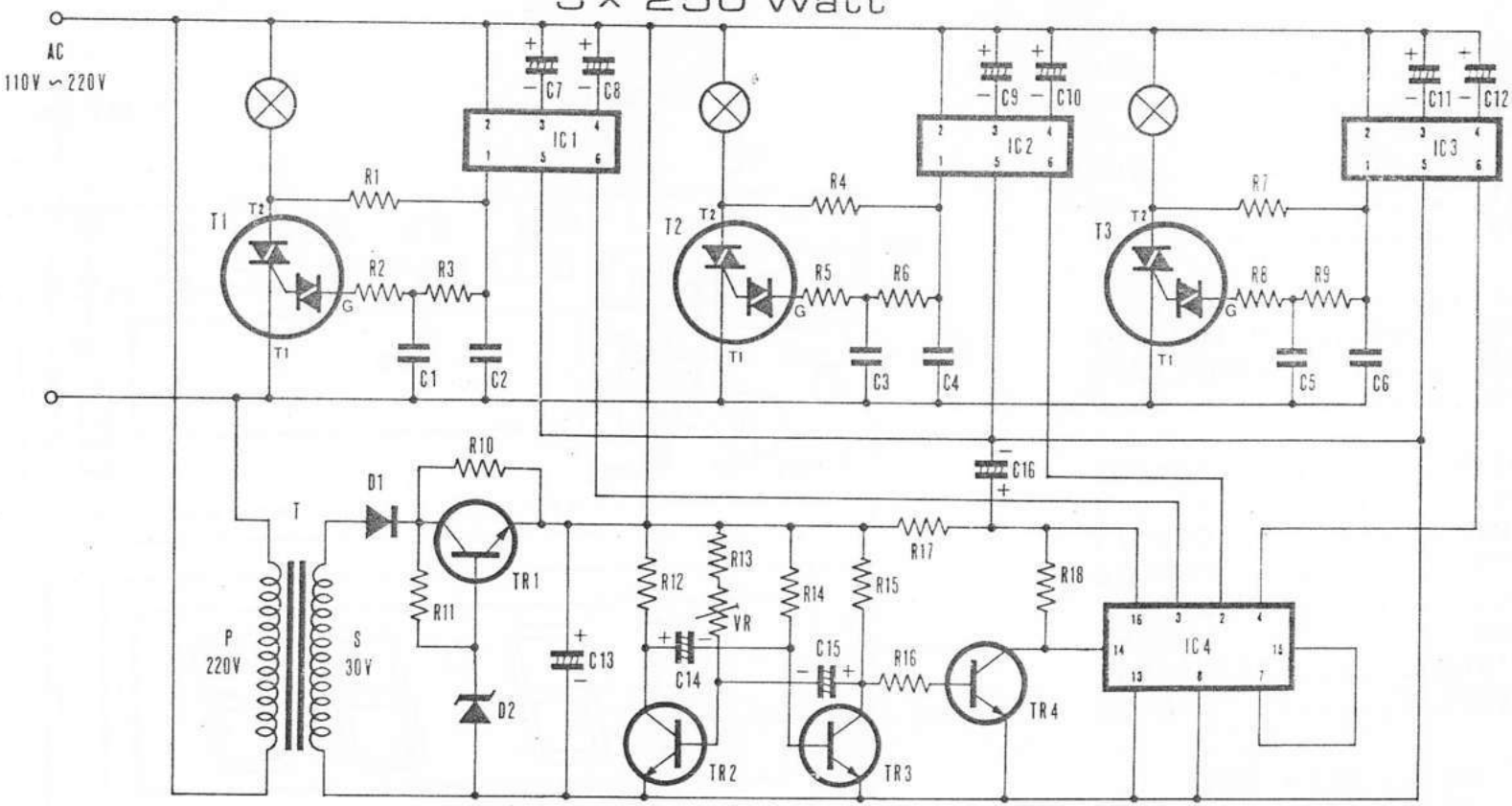

TL-1033

CIRCUIT DIAGRAM

TL-1107

PARTS LIST

R1.....	33K
R2.....	1,2K
R3.4.5.....	47
R6.....	10M
R7.....	5,6M
R8.....	3,3K
C1.....	33pF/50V
C2.3.....	0,1uF/50V
C4.....	100uF/25V
VC.....	25pF
D1.2.3.....	1N4002
D4.....	ZD 6V2
TR1.....	CS9013
TR2.....	CS9012
IC1.....	MM5369
IC2.....	LM8360
X'TAL.....	3579545Hz
DISPLAY.....	CS643G

S1... SLOW SET
S2... FAST SET
S3... DISPLAY

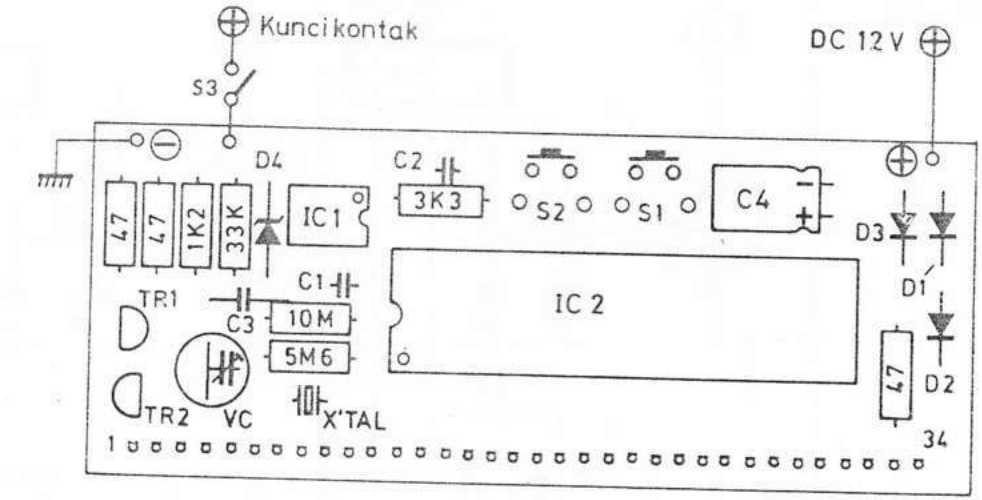

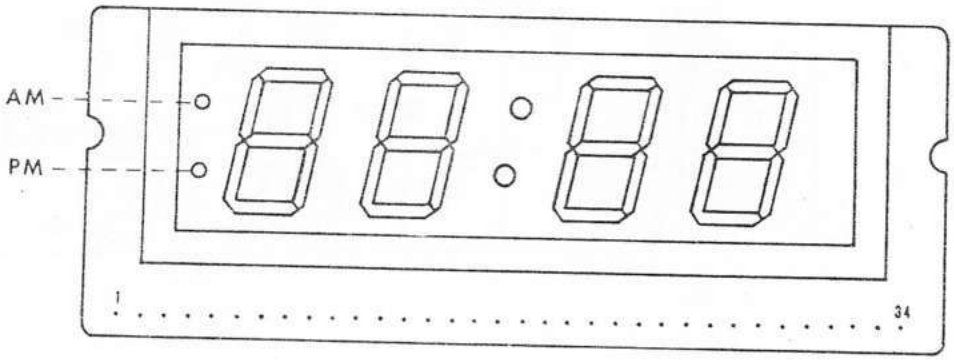

CAR CLOCK
(JAM MOBIL)

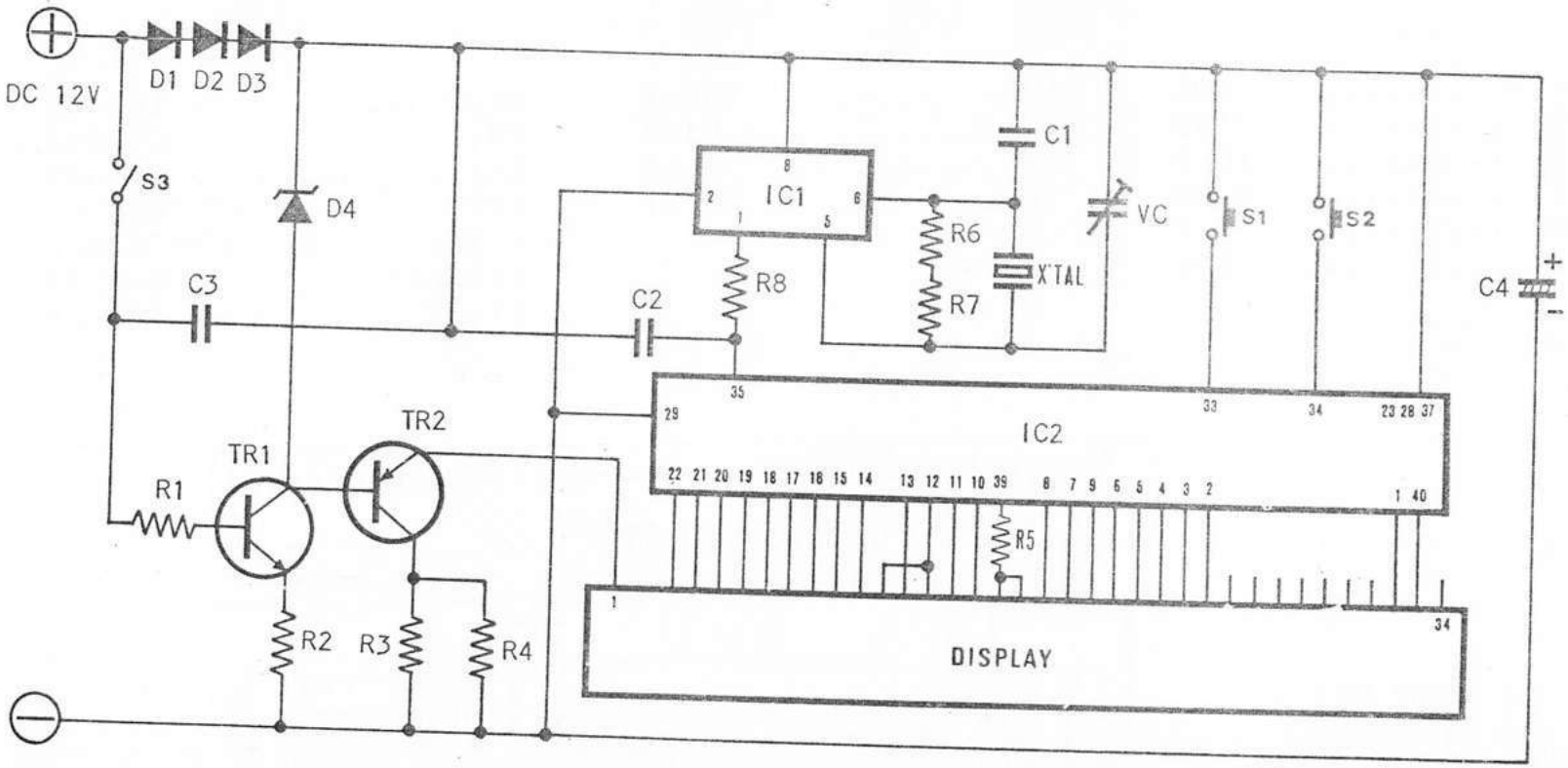

TL-1107

CIRCUIT DIAGRAM

TL-1112

PARTS LIST

R1.2.....	10K	C1.....	100uF	D1.2.....	1N4002
R3.....	3,3K	C2.3.....	0,01uF	TR.....	CS9013
R4.....	10 M	C4.....	33 pF	IC1.....	MM5369
R5.....	5,6M	VC.....	20 pF	IC2.....	MM5387/LM8362
R6.....	1 K			X'TAL.....	3579,545Kc
R7.....	820			DISPLAY.....	TLR-2327
				S1.S2.....	PUSH SWITCH

S1 FAST SET
S2 SLOW SET
S3 DISPLAY

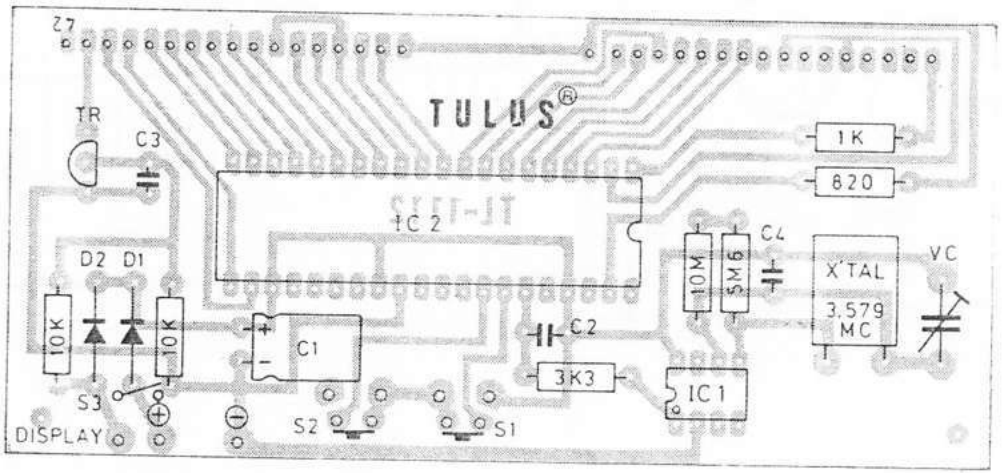

ELECTRONIC DIGITAL CLOCK

(UKURAN DISPLAY 16 X 5 cm.)

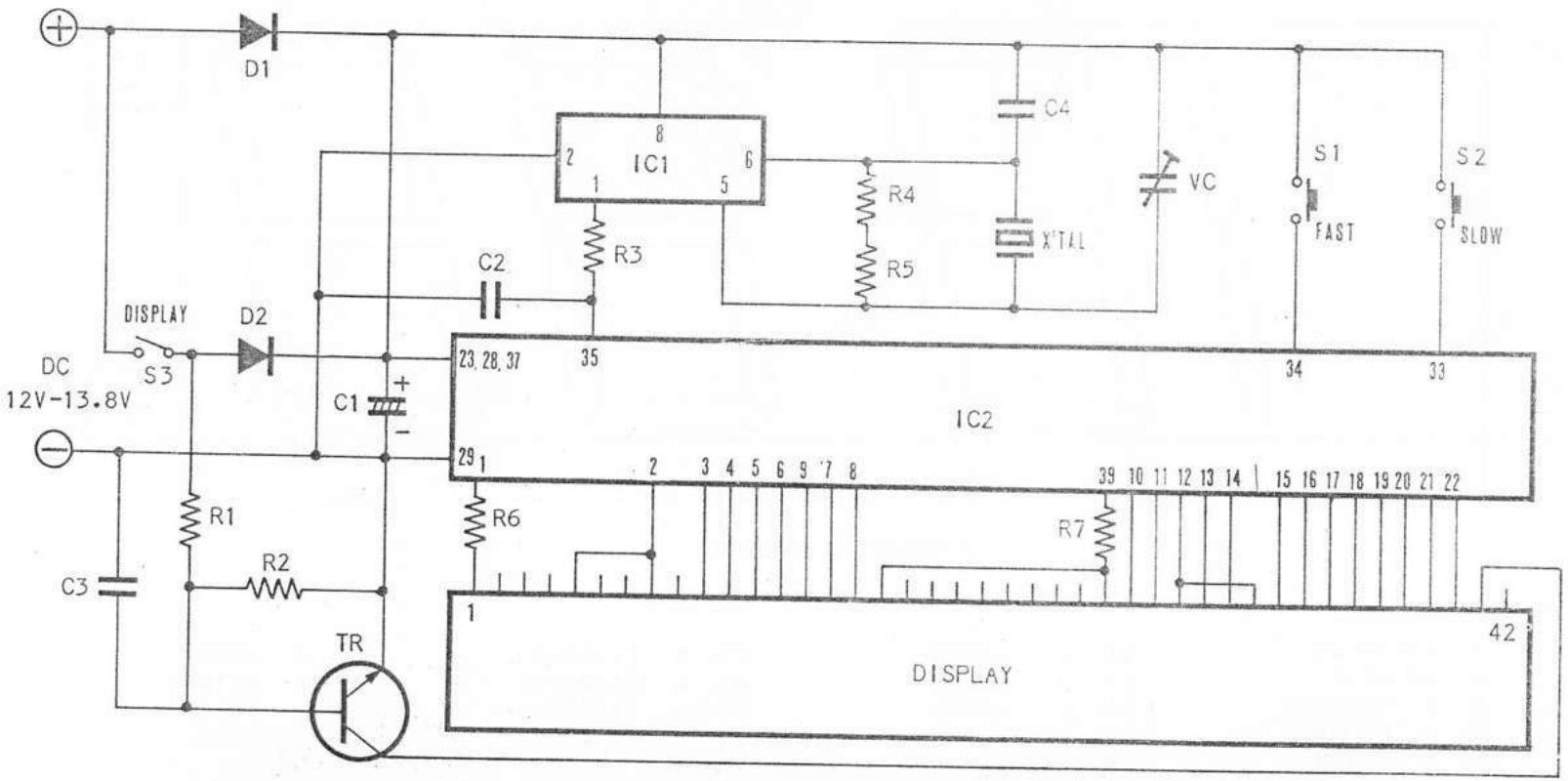

TL-1112

CIRCUIT DIAGRAM

TL-1112

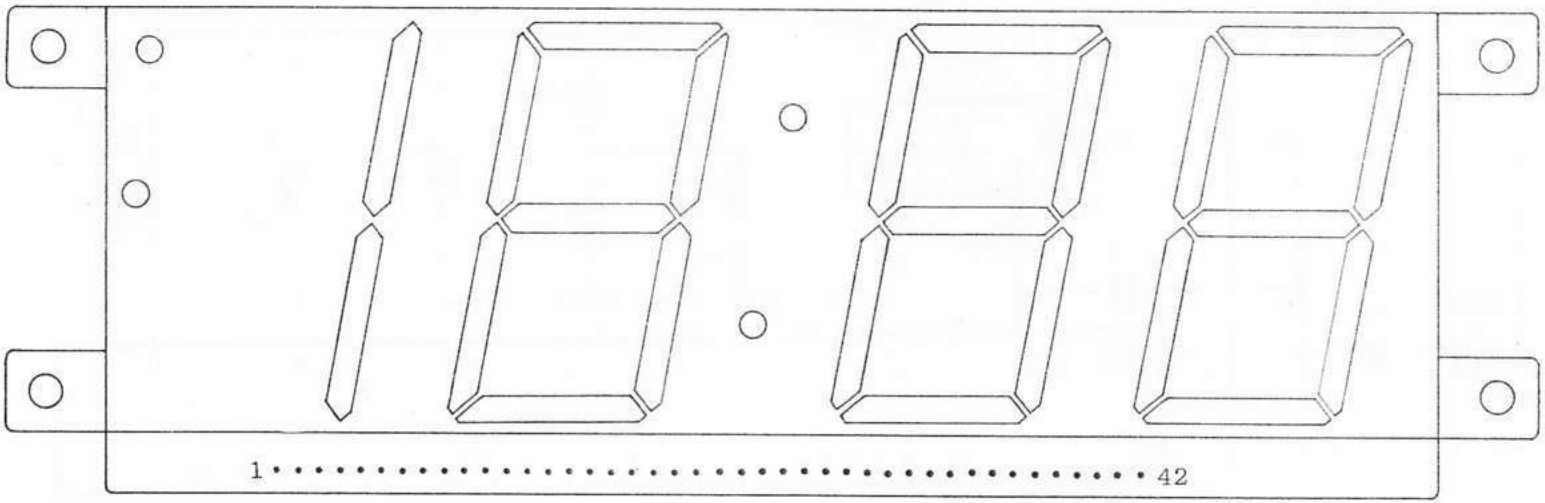

DISPLAY TLR-2327

1. TITIK AM
2. NEGATIF
5. c (10HRS)
8. b (10HRS)
10. f (HRS)
11. g (HRS)
12. a (HRS)
13. b (HRS)
14. e (HRS)
15. d (HRS)
16. c (HRS)
17. TITIK
26. TITIK
27. f (10MINS)
28. g (10MINS)
29. a (10MINS)
30. b (10MINS)
31. e (10MINS)
32. d (10MINS)
33. c (10MINS)
34. f (MINS)
35. g (MINS)
36. a (MINS)
37. b (MINS)
38. e (MINS)
39. d (MINS)
40. c (MINS)
41. NEGATIF.
42. TITIK.

TL-1122

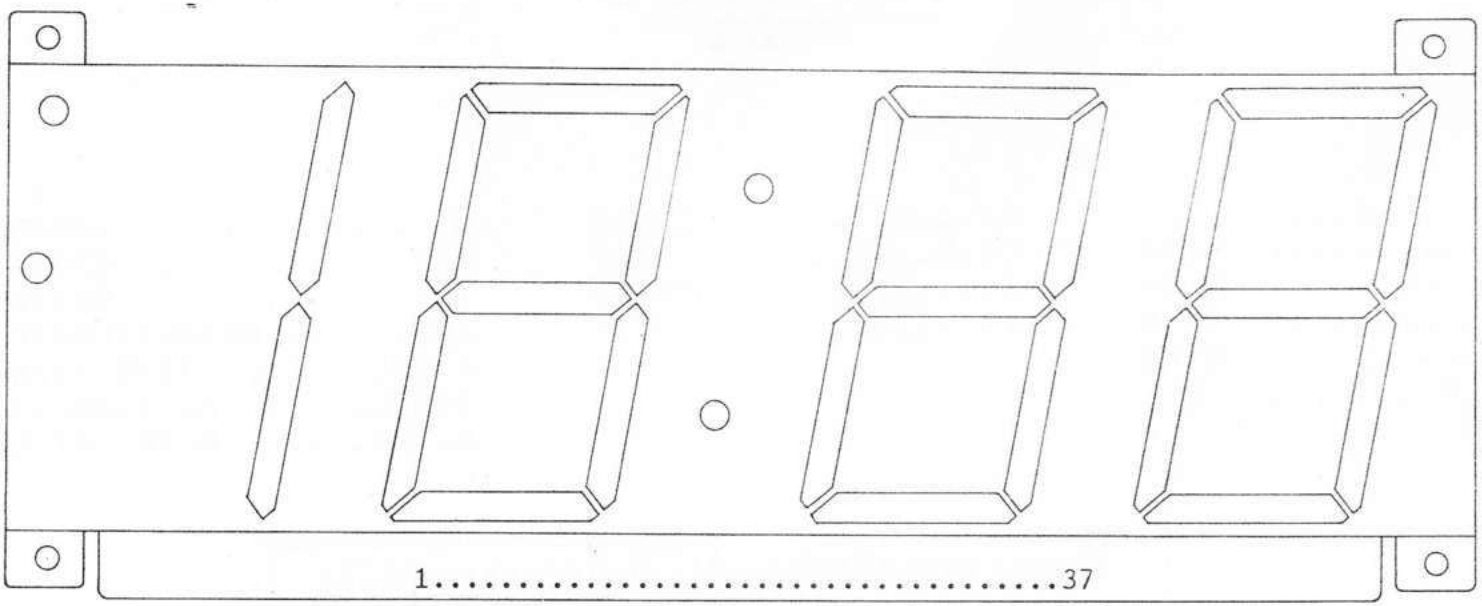

DISPLAY SL-1086-53T

1. TITIK PM
2. NEGATIF
3. TITIK AM
4. NEGATIF
5. e (10HRS)
6. d (10HRS)
7. c (10HRS)
8. g (10HRS)
9. f (10HRS)
10. b (10HRS)
11. a (10HRS)
12. f (HRS)
13. g (HRS)
14. a (HRS)
15. b (HRS)
16. e (HRS)
17. d (HRS)
18. c (HRS)
19. TITIK SECOND
20. TITIK SECOND
21. f (10MINS)
22. g (10MINS)
23. a (10MINS)
24. b (10MINS)
25. e (10MINS)
26. d (10MINS)
27. c (10MINS)
28. f (MINS)
29. g (MINS)
30. a (MINS)
31. b (MINS)
32. e (MINS)
33. d (MINS)
34. c (MINS)
35 NEGATIF
36 TITIK
37 TITIK

TL-1122

PARTS LIST

R1.....	22K
R2.....	10K
R3.....	3,3K
R4.....	10 M
R5.....	5,6M
R6.7.8.....	1 K

C1.....	100uF
C2.3.....	0,01uF
C4.....	33 pF
VC.....	20 pF

D1.2.....	1N4002
TR.....	CS9013
IC1.....	MM5369
IC2.....	MM5387/LM8362
X'TAL.....	3579,545Kc
DISPLAY....	SL-1086-53T
S1.S2.....	PUSH SWITCH

S1 FAST SET
S2 SLOW SET
S3 DISPLAY

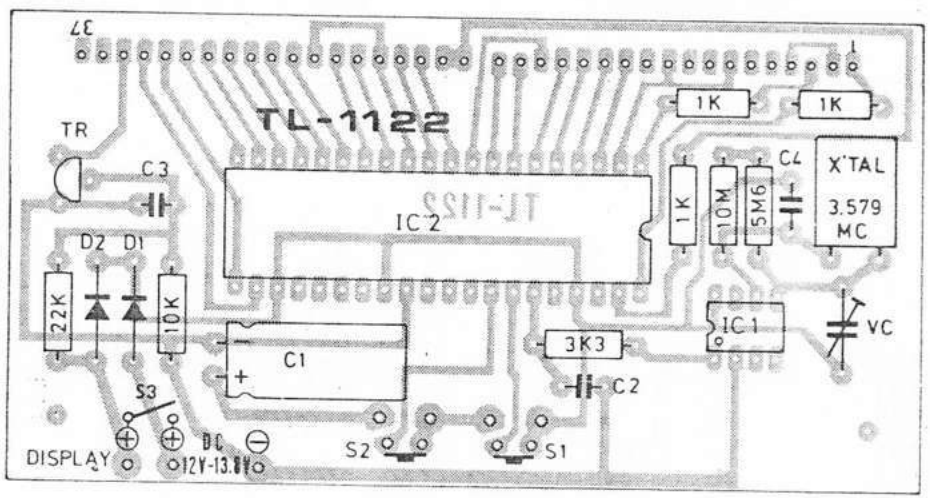

ELECTRONIC DIGITAL CLOCK

(UKURAN DISPLAY 21.8 X 6.8 cm.)

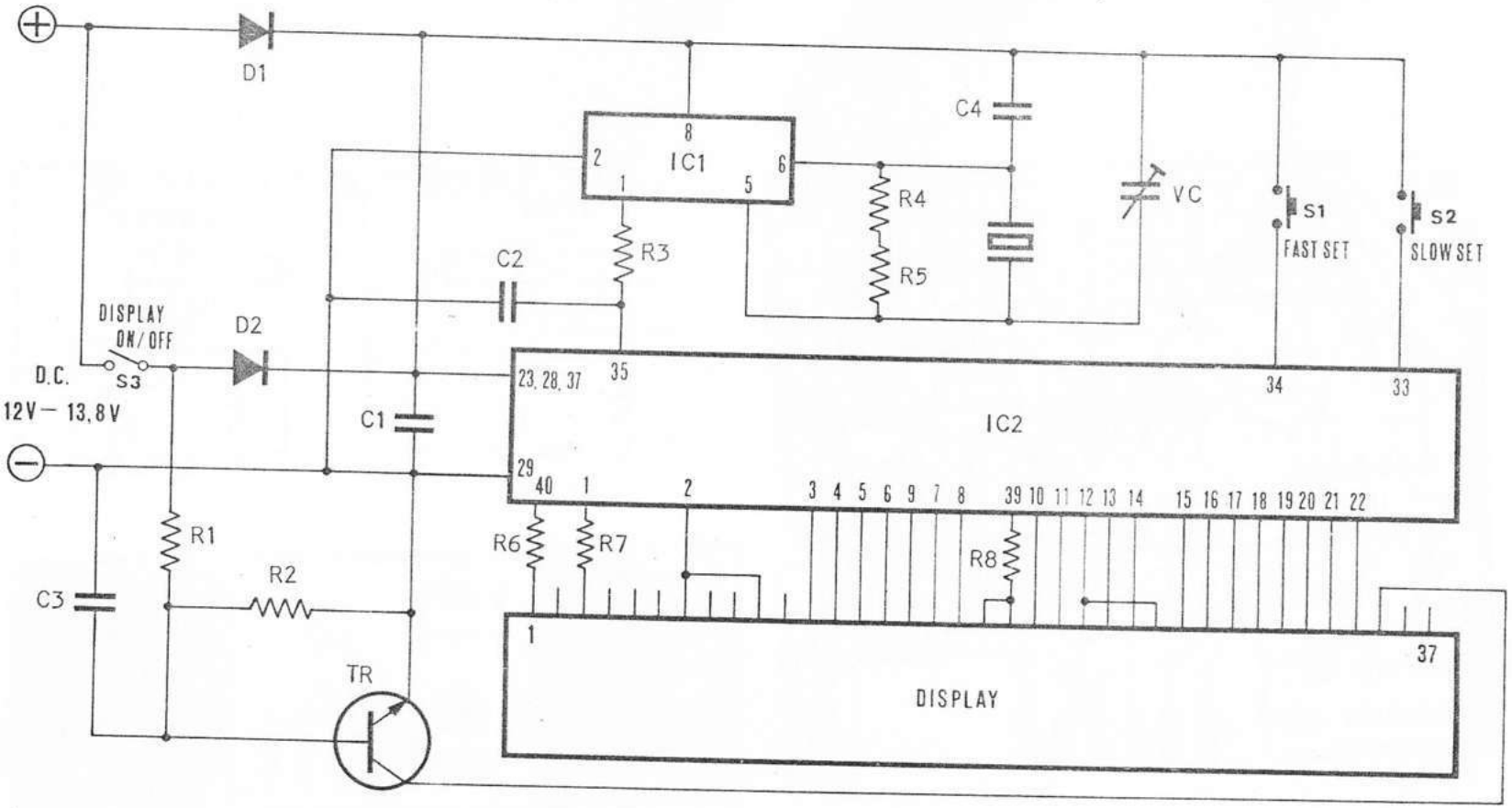

TL-1122

CIRCUIT DIAGRAM

TL-1200

CIRCUIT BOARD

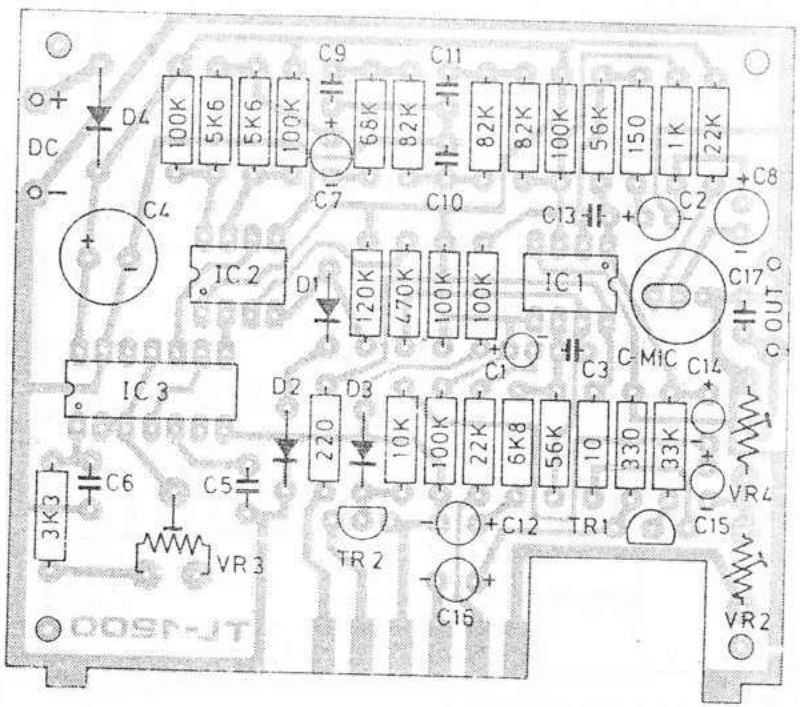

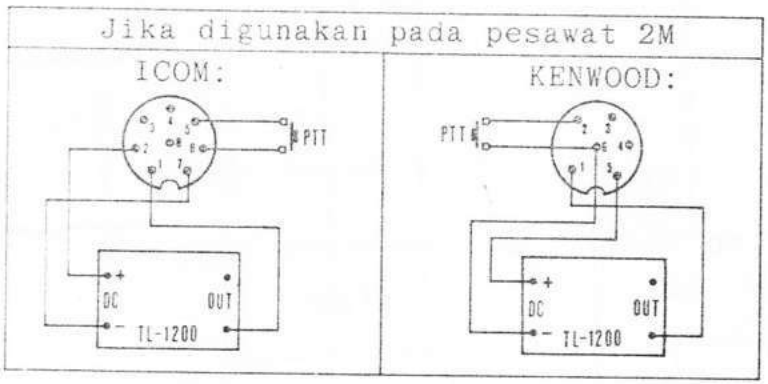

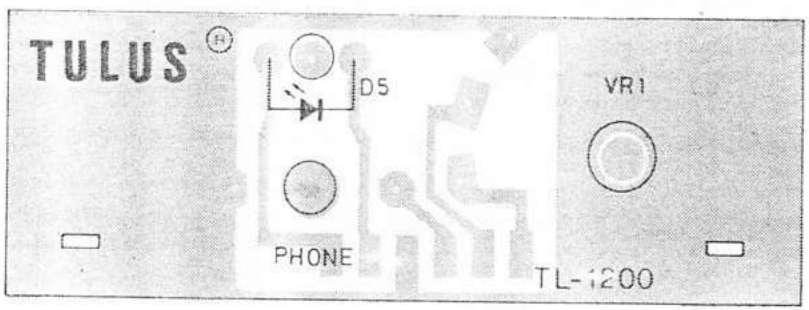

ELECTRONIC ECHO-MIC

(ECHO CHAMBER/RUANG)

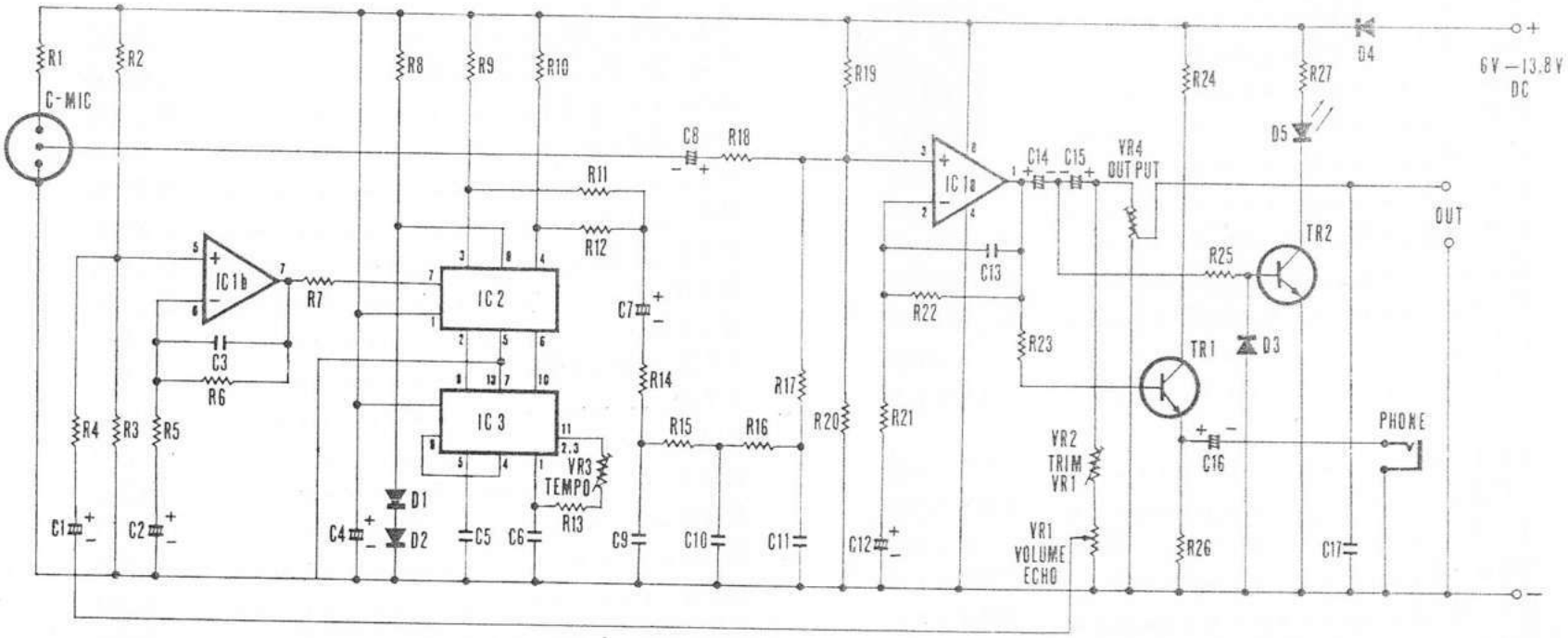

TL-1200

CIRCUIT DIAGRAM

TL-1200

PARTS LIST

C1.7	0,22uF
C2.12	1 uF
C3	150pF
C4	220uF
C5.6	0,1uF
C8	33uF
C9.10.11	4,7KpF
C13	390pF
C14.15	0,47uF
C16	10uF
C17	10KpF
IC1	TL082
IC2	MN3007
IC3	TMN-13-2336
TR1.2	CS9014
D1.2.3	1N4148
D4	1N4002
D5	LED
MIC	Condenser Mic

R1.4	22K
R2.3.9.10.19.20	100K
R5	6,8K
R6.22	56K
R7	470K
R8	120K
R11.12	5,6K
R13	3,3K
R14	68K
R15.16.17	82K
R18	1 K
R21	150
R23	33K
R24	10
R25	10K
R26	330
R27	220
VR1	50K
VR2	200K
VR3.4	10K

TL-1220 / 1220A

PARTS LIST

R1.2.10.11.19.20.27.28.35.36	100K
R3.6.25.26	10K
R4	6,8K
R5.21.18.38	56K
R7	2,2K
R8	470K
R9	18K
R12.13.17	5,6K
R14	33K
R15	39K
R16	47K
R22.37	150
R23	12K
R24.30.32.33	220K
R29	8,2K
R31	4,7K
R34	1 K
R39	5
R40.41.42	220
VR1	100K
VR2.4	50K
VR3.5	10K

C1.4.15.18.27.30	10uF
C2	33uF
C3.7	100uF
C5.16.20	150pF
C6.17	0,47uF
C8.26.29	0,1 uF
C9	0,022uF
C10.22.24	0,22uF
C11	0,01uF
C12.13	0,0047uF
C14	4,7uF
C19.21	1 uF
C23	0,015uF
C25	330pF
C28	1000uF
C31	0,0022uF

D1.2.3.4.5.6.7	1N4148
D8	1N4002
D9.10.11	LED
TR	CS9013
IC1.2	TL-082
IC3	MN3008/MN3005
IC4	TMN13-2335
IC5	LM386

TL-1220 / 1220A

CIRCUIT BOARD

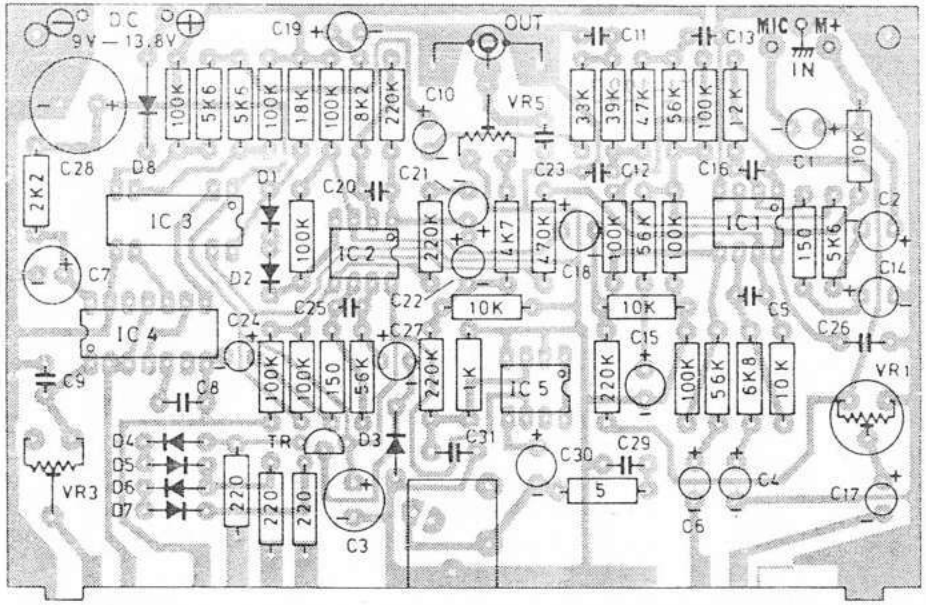

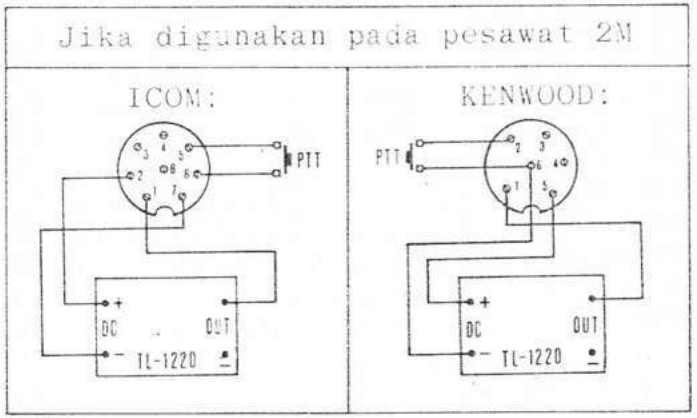

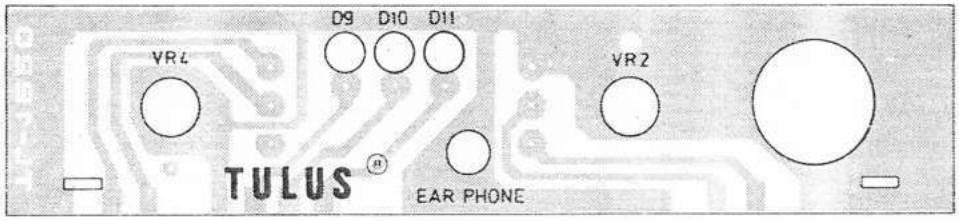

ECHO REVERBERATION
(REPEATER)

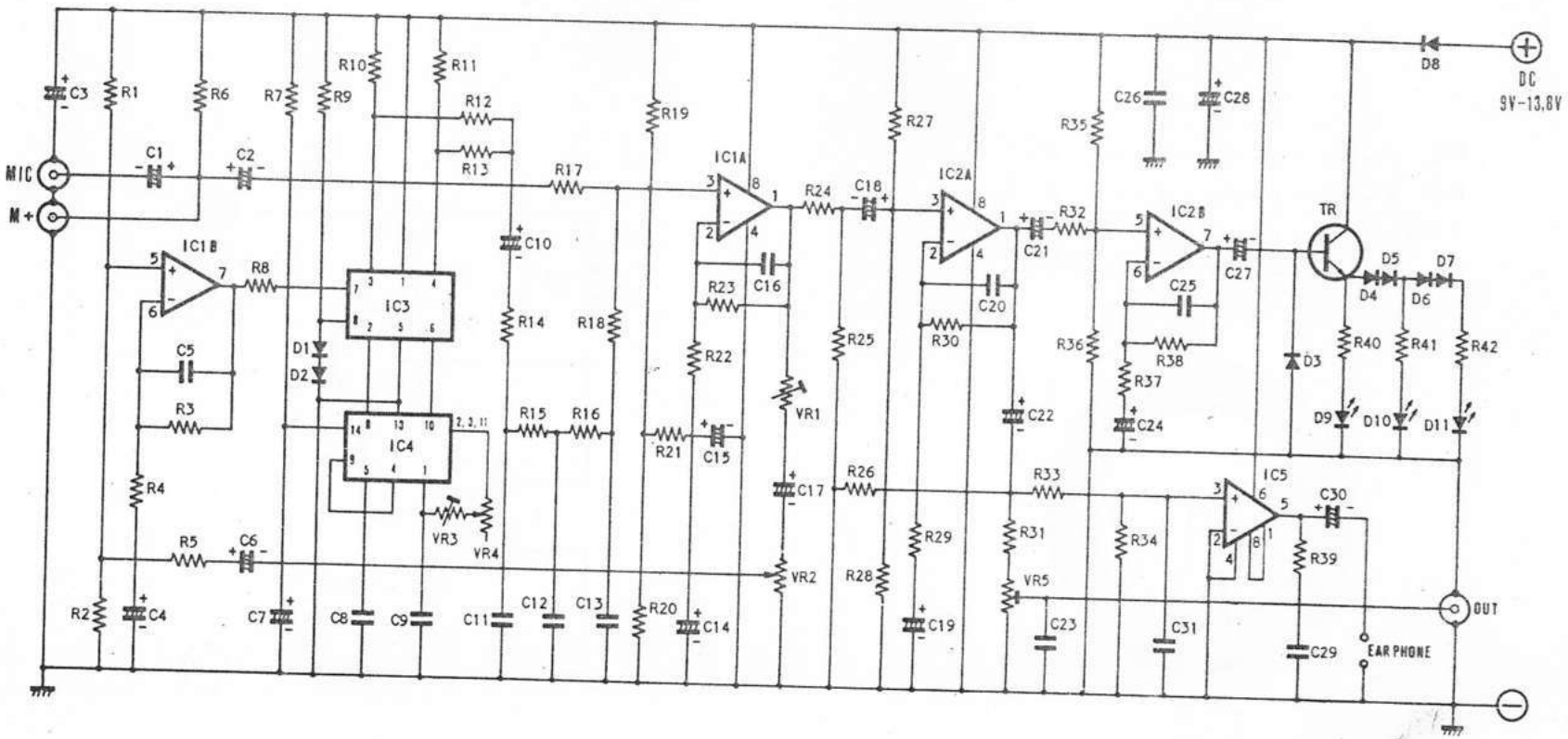

TL-1220/1220A

CIRCUIT DIAGRAM

PIEZO ALARM

(ELECTRONIC BUZZER)

R1..... 56K
R2..... 1 K
TR..... CS9013
S..... SOUND ELEMENT

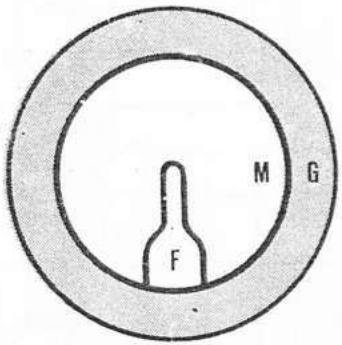

SOUND ELEMENT
WITH FEEDBACK ELECTRODE

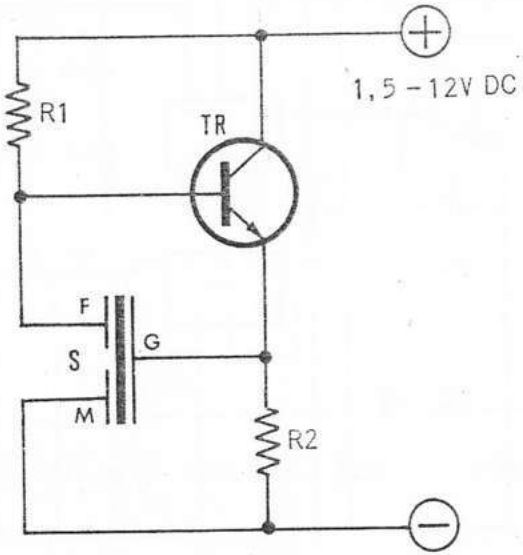

2N 2646	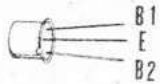
BC 107 BC 109 2N 2222A ZN 414	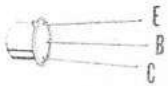
FCS 9012 FCS 9013 FCS 9014 FCS 9015 SE 4010 2N 3569 2N 4355	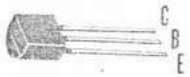 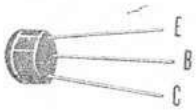
BC 141 BC 160 BC 161	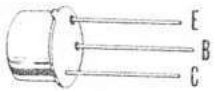
Q 4004LT Q 4006LT	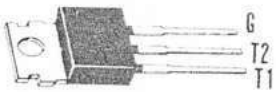
C 1162	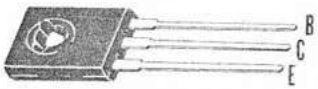
C 838	
C 103	

PT - 500	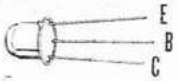
A 671 C 1061 D 317 B 512	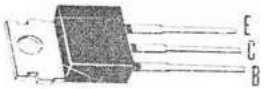
2SB 337 2SB 407 MJ 2955 MJ 4502 2N 3055	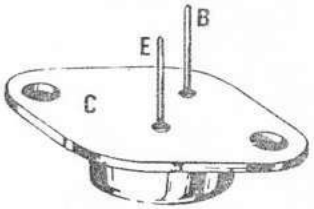
SPD MEL 11 MEL 12	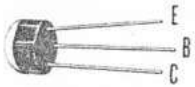
PUT MEU 21	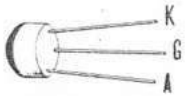
FOR 2B F7-21S	
T 103 C 10	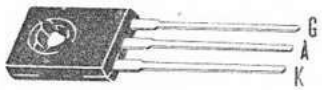
2N 5061 EC 103D	